CONSTRUCTION SPECIFICATION MANUAL

TECHNICAL STANDARDS FOR WASTEWATER AND RECLAIMED WATER

Tavares, Florida

Jones Edmunds & Associates, Inc.
Project No. 06806-012-01

August 2016

CONSTRUCTION SPECIFICATION MANUAL
TECHNICAL STANDARDS FOR WASTEWATER
AND RECLAIMED WATER

TABLE OF CONTENTS

Section 1 – General Provisions

Section 7 – Utility Excavation, Trenching, and Backfilling

Section 8 – Boring, Jacking, and Tunneling Crossing

Section 10 – Gravity Sewers

Section 10A – Sewer Service Connections

Section 11 – Force Main

Section 12 – Sewerage Pumping Station

Section 13 – Pump Controller / Remote Terminal Unit (RTU)

Section 14 – Standby Power Generator – Diesel

Section 17 – Utility Department Policies for Fats, Oil, and Greases

Section 18 – Reuse System

Section 19 – Rights-of-Way and Easements

Section 20 – Grassing and Sodding

Section 21 – Temporary and Permanent Erosion and Sedimentation Control

Section 22 – Measurement and Payment

Section 23 – Warranty

Section 24 – Record Drawings

Appendix A – Standard City Details

General Details

G-1 Erosion Control Structure
G-2 Type 1 Floating Turbidity Barrier
G-3 Bedding Details
G-4 Piping Clearances
G-5 Water Line Crossing
G-6 Thrust Restraint Details
G-7 Boring and Jack Detail
G-8 Locating Wire Splicing
G-9 Open Cut and Repair Detail
G-10 Concrete Walkway Detail
G-11 Sod Planting
G-12 Vinyl Fence Detail

Reuse Details

R-1 General Reuse and Effluent Reuse Notes
R-2 Offset Air Release Valve Vault Detail
R-3 Reuse Water Service Connection Details
R-4 Reclaimed Water Metering Detail
R-5 Gate Valve & Box Detail
R-5A Valve Collar Detail

Sewer Details

S-1 Sanitary Precast Manhole Detail
S-1a Sanitary Manhole Cover Detail
S-2 Pipe Connection to Precast Sanitary Manhole
S-3 Typical Manhole Plan
S-4 Inside Drop Standard Precast Manhole Detail
S-5 Sanitary Sewer Service
S-6 Sanitary Sewer Service – Double (Deleted July 2011)
S-7 Chimney Connection
S-8 Trunk Line Clean-Out Detail
S-9 Gravity Clean-Out
S-10 Triplex Lift Station
S-11 Duplex Lift Station
S-12 Plug & Valve Box
S-13 Combination Air Valve for Force Mains
S-14 Valve Collar
S-15 Grease Trap

SECTION 1
GENERAL PROVISIONS

1.01 INTENT AND SCOPE OF PLANS AND SPECIFICATIONS:

It is the intent of the plans and specifications that one shall supplement the other, but not necessarily duplicate one another. Any work called for in one and omitted in the other shall be executed as if called for in both in order that the work be fully-completed according to the complete design as determined by the Design Engineer (Engineer) and approved by the City's Project Manager. Should any discrepancy appear in or between the drawings and the specifications, the specifications will govern. It is to be understood that the work described in the specifications and shown on the plans shall be complete in every detail whether every necessary item is particularly mentioned or not and the Contractor shall be held to provide all items of labor and materials necessary for the satisfactory completion of the indicated work. Any provisions contained in the specifications or shown on the standard drawings which are not applicable to the work pertaining to this project shall be disregarded. All testing shall be accomplished in accordance to these specifications and only at the discretion of the City shall any portion of the testing be waived. The Developer and his Design Engineer are reminded that all water, reuse and sewer system components must be flood proofed against the 100-year flood occurrence and against inflow and infiltration.

A. The Contractor shall check all dimensions, elevations, quantities and instructions shown on the plans or given in the specifications and shall notify the Engineer of Record should any discrepancy of any kind be found in the plans, specifications or conditions at the site. He will not be allowed to take advantage of any discrepancy, error or omissions. If any discrepancy is discovered, the Engineer of Record with the City's approval will issue full instructions pertaining thereto and the Contractor shall carry out these instructions as if originally specified.

B. The Specifications are divided into Sections for convenience of reference. The materials, work, etc., mentioned or specified in one part are not intended to be limited to that part only, but shall be applied with equal force to any other part or division of work where such materials, work, equipment, etc., are mentioned or required to properly provide for acceptable work according to the true intent of the drawings and specifications. Reference to standard specifications (ASTM, AWWA, ANSI, etc.), national codes, and local or state codes and laws and ordinances shall mean the latest edition of said document in effect at the time of taking bids unless specifically stated otherwise.

C. Drawings shall be followed in construction of the work and all dimensions and elevations shown on the Plans shall be accurately maintained. Scaled measurements will not be allowed and no work shall be performed when dimensions or elevations are not indicated until such dimensions or elevations are obtained from the Engineer.

D. Time Period of Approved Plans

1. Plans shall be valid for construction for a period of one year from the date of City approval only. All items not under construction within one year of the approval date shall require a new approval prior to the commencement of construction.

E. Definitions and Terminology

1. Defined Terms: Wherever used in the Contract Documents and printed with initial capital letters, the terms listed below will have the meaning indicated which are applicable to both the singular and plural thereof. In addition to terms specifically defined, terms with initial capital letters in the Contract Documents include references to identified articles and paragraphs, and the titles of other documents or forms.

a. *Application for Payment* – The form acceptable to Engineer which is to be used by Contractor during the course of the Work in requesting progress or final payments and which is to be accompanied by such supporting documentation as is required by the Contract Documents.

b. *Change Order* – A document recommended by Engineer which is signed by Contractor and Owner and authorizes an addition, deletion, or revision in the Work or an adjustment in the Contract Price or the Contract Times, issued on or after the Effective Date of the Agreement.

c. *City* – The City of Tavares, Florida the entity for whom the work is being performed.

d. *Contract* – The entire and integrated written agreement between the Owner and Contractor concerning the Work. The Contract supersedes prior negotiations, representations, or agreements, whether written or oral.

e. *Contract Documents* – Those items so designated in the Agreement. Only printed or hard copies of the items listed in the Agreement are Contract Documents. Approved Shop Drawings, other Contractor submittals, and the reports and drawings of subsurface and physical conditions are not Contract Documents.

f. *Contract Price* – The moneys payable by Owner to Contractor for completion of the Work in accordance with the Contract Documents as stated in the Agreement.

g. *Contract Times* – The number of days or the dates stated in the Agreement to: (i) achieve Milestones, if any; (ii) achieve Final Completion; and (iii) complete the Work so that it is ready for final payment as evidenced by Engineer's written recommendation of final payment.

h. *Contractor* – The individual or entity with whom Owner or the Developer has entered into the Agreement.

i. *Design Engineer* – The Florida Registered Professional Engineer responsible for preparation of construction plans, specification and permits.

j. *Drawings* – That part of the Contract Documents prepared or approved by Engineer which graphically shows the scope, extent, and character of the Work to be performed by Contractor. Shop Drawings and other Contractor submittals are not Drawings as so defined.

k. *Engineer of Record* – The Florida Registered Professional Engineer responsible for Construction Administration and Florida Department of Environmental Protection Notification of Completion of Construction.

l. *Laws and Regulations; Laws or Regulations* – Any and all applicable laws, rules, regulations, ordinances, codes, and orders of any and all governmental bodies, agencies, authorities, and courts having jurisdiction.

m. *Notice of Award* – The written notice by Owner to the Successful Bidder stating that upon timely compliance by the Successful Bidder with the conditions precedent listed therein, Owner will sign and deliver the Agreement.

n. *Project* – The total construction of which the Work to be performed under the Contract Documents may be the whole, or a part.

o. *Samples* – Physical examples of materials, equipment, or workmanship that are representative of some portion of the Work

and which establish the standards by which such portion of the Work will be judged.

p. *Shop Drawings* – All drawings, diagrams, illustrations, schedules, and other data or information which are specifically prepared or assembled by or for Contractor and submitted by Contractor to illustrate some portion of the Work.

q. *Site* – Lands or areas indicated in the Contract Documents as being furnished by Owner upon which the Work is to be performed, including rights-of-way and easements for access thereto, and such other lands furnished by Owner which are designated for the use of Contractor.

r. *Specifications* – That part of the Contract Documents consisting of written requirements for materials, equipment, systems, standards and workmanship as applied to the Work, and certain administrative requirements and procedural matters applicable thereto.

s. *Subcontractor* – An individual or entity having a direct contract with Contractor or with any other Subcontractor for the performance of a part of the Work at the Site.

t. *Supplier* – A manufacturer, fabricator, supplier, distributor, materialman, or vendor having a direct contract with Contractor or with any Subcontractor to furnish materials or equipment to be incorporated in the Work by Contractor or Subcontractor.

u. *Underground Facilities* – All underground pipelines, conduits, ducts, cables, wires, manholes, vaults, tanks, tunnels, or other such facilities or attachments, and any encasements containing such facilities, including those that convey electricity, gases, steam, liquid petroleum products, telephone or other communications, cable television, water, wastewater, storm water, other liquids or chemicals, or traffic or other control systems.

v. *Unit Price Work* - Work to be paid for on the basis of unit prices.

w. *Work* – The entire construction or the various separately identifiable parts thereof required to be provided under the Contract Documents. Work includes and is the result of performing or providing all labor, services, and documentation necessary to produce such construction, and furnishing, installing,

and incorporating all materials and equipment into such construction, all as required by the Contract Documents.

2. Terminology

a. The words and terms are not defined, but when used in Contract Documents, have the indicated meaning.

b. Intent of Certain Terms or Adjectives:

(1) The Contract Documents include the terms “as allowed,” ”as approved,” ”as ordered,” “as directed” or terms of like effect or import to authorize an exercise of professional judgment by Engineer. In addition, the adjectives “reasonable,” ”suitable,” “acceptable,” “proper,” “satisfactory,” or adjectives of like effect or import are used to describe an action or determination of Engineer as to the Work. It is intended that such exercise of professional judgment, action or determination will be solely to evaluate, in general, the work for compliance with the information in the Contract Documents and with the design concept of the Project as a functioning whole as shown or indicated in the Contract Documents (unless there is a specific statement indicating otherwise). The use of any such term or adjective is not intended to and shall not be effective to assign to Engineer any duty or authority to supervise or direct the performance of the Work, or any duty or authority to undertake responsibility contrary to provisions of the Contract Documents.

c. Day: The word “day” means a calendar day of 24 hours measured from midnight to the next midnight.

d. Defective: The word “defective,” when modifying the word “Work,” refers to Work that is unsatisfactory, faulty, or deficient in that it:

(1) Does not conform to the Contract Documents; or
(2) Does not meet the requirements of any applicable inspection, reference standard, test, or approval referred to in the Contract Documents; or
(3) Has been damaged prior to Engineer’s recommendation of final payment.

e. Furnish, Install, Perform, Provide:

(1) The word "furnish," when used in connection with services, materials, or equipment, shall mean to supply and deliver said services, materials, or equipment to the Site (or some other specified location) ready for use or installation and in usable or operable condition.

(2) The word "install," when used in connection with services, materials, or equipment shall mean to put into use or place in final position said services, materials, or equipment complete and ready for intended use.

(3) The words "perform" or "provide," when used in connection with services, materials or equipment, shall mean to furnish and install said services, materials, or equipment complete and ready for intended use.

(4) When "furnish," "install," "perform," or "provide" is not used in connection with services, materials, or equipment in a context clearly requiring an obligation of Contractor, "provide" is implied.

f. Unless stated otherwise in the Contract Documents, words or phrases that have a well-known technical or construction industry or trade meaning are used in the Contract Documents in accordance with such recognized meaning.

F. Pre-Design Conference

A pre-design conference between the developer, the design engineer and the City shall be required to be held prior to submittal of construction plans and specifications.

G. Plans

1. Submission

a. All construction plans submitted to the City for review and approval shall bear the seal and signature of the Florida Registered Professional Engineer responsible for the project. The address and telephone number of this person shall be shown along with the signature.

b. Four (4) sets of plans and specifications shall be submitted for approval to the City. Two approved sets shall be returned to the Design Engineer for the construction of the project.

2. Assembly

a. Sheet Size

The standard size sheet for construction plans submitted to the City for approval shall be 24" X 36". Worksheets and data sheets used in preliminary design work and reviews are not limited to any size, except that which is convenient to handle.

b. Items of Construction Required

The developer shall provide as appropriate water, sanitary sewers, reuse systems, roadways and stormwater management areas, and all other necessary improvements in accordance with City specifications, standards and policies.

3. Utility Coordination

It shall be up to the developer to coordinate all utilities within his development.

4. City Standards and Specifications

Copies of City standards and specifications may be obtained from the Utility Department.

1.02 MATERIALS AND WORKMANSHIP:

It is the intent of these Specifications that the Contractor shall furnish first-class materials and do all work in a first-class manner so that the completed job shall be thoroughly satisfactory in every respect. To this end, the Contractor shall utilize all of his construction experience and shall consult with the Engineer regarding items in the Plans and Specifications which may be altered to the benefit of the work.

A. Materials, Services and Facilities: It is understood that except as otherwise specifically stated in the specifications, the Contractor shall provide and pay for all materials, labor, tools, equipment, water, light, power, transportation, superintendence, temporary construction of every nature, and all other services and facilities of every nature whatsoever necessary to execute, complete and deliver the work within the specified time.

Materials must be approved for use before being purchased by the Contractor. The Contractor shall submit to the Engineer of Record a list of such materials or products, and the shop drawings, together with such samples as may be necessary

for determination of their acceptability and obtain material/product approval. No request for payment will be approved until this list has been received and approved by the City. Delay caused by obtaining approvals for substitute materials will not be considered justifiable grounds for an extension of construction time.

B. Shop Drawings: Shop Drawings are original drawings prepared by the Contractor, or a subcontractor or supplier, which illustrate some portion of the work and show fabrication, layout, and setting or erection details. Shop drawings shall also include manufacturer's catalog sheets, brochures, diagrams, schedules, performance charts, illustrations and other standard descriptive data, as required. Shop drawings shall be clearly marked to identify specific materials, finishes, products or models, and shall show all required dimensions and clearances, performance characteristics and capacities, wiring diagrams and controls.

1. The Contractor shall review and check all shop drawings for accuracy and conformance with the contract documents. The Contractor's review shall include verifying field measurements, field construction criteria, dimensions, catalog numbers and similar data. Prior to submission to the Engineer of Record, all shop drawings shall be marked, stamped or otherwise certified as approved by the Contractor, dated and signed or initialed. Any shop drawings not so marked will be returned to the Contractor without the Engineer of Record's review.

2. The Contractor shall schedule the submission of shop drawings to allow sufficient time for review by the Engineer of Record and the City, corrections and resubmissions by the Contractor, and re-checking by the Engineer of Record/City, as necessary. The Engineer of Record will review shop drawings within two (2) weeks from date received.

3. A minimum of two (2) copies of each submittal indicating approval by the Engineer of Record shall be submitted to the City.

4. The Contractor shall not begin fabrication or work which requires submittals until return of submittals with the full approval.

C. Material Inspection and Testing: All materials and equipment used in the construction of this project shall be subject to adequate inspection and testing, in accordance with requirements and accepted standards. All testing shall be done after fabrication and performed within the continental limits of the United States.

1. Materials of construction, particularly those upon which the strength and durability of the structure may depend, shall be subject to inspection and

testing to establish conformance with specifications and suitability for uses intended.

2. Laboratory or Inspection Agencies shall be selected, or approved, by the City and Engineer of Record. Preparation of test samples and shipment to an independent laboratory shall be by the Contractor. The Contractor will pay for all tests and reports, except those which may be specifically excluded by other sections of the specifications.

1.03 CONSTRUCTION

A. Start

1. Notification

The City shall be notified in writing by the Contractor of the proposed date of the beginning of construction of the water, sanitary sewer, reuse, roadway, and stormwater facilities. Any time that work is to stop for a period of time in excess of two (2) working days, the City shall be notified of such interruption.

2. Pre-Construction Conference

At least two (2) days prior to the preconstruction conference, the Engineer of Record shall provide the City's Project Manager with four sets of plans and specifications stamped "issued for construction". Project cut sheets and applicable shop drawings shall be provided as soon as possible after the preconstruction conference and prior to starting construction. A pre-construction conference shall be held at least two (2) days before the commencement of construction. The developer shall be responsible for arranging this conference with the City. The conference shall be attended

- City's Project Manager
- City's Construction Inspector
- Representative of Design Engineer and Engineer of Record
- Representative of the Contractor and/or the Contractor's Project Foreman
- Representative of any Subcontractors involved with project

- Other utilities servicing the project.

a. Required insurance certificates will be provided by the developer to the City when work involves City property, Right-of-Way, or easements.

B. Completion

1. Record Drawings

Within two weeks following final inspection, the developer shall submit Record Drawings in accordance with Section 24, Record Drawings.

2. Certificates of Compliance

Certificates of compliance with the specifications furnished by the material supplier shall be submitted on all materials used in the completion of this work.

C. Off-Site Pollution Protection

It will be the developer's responsibility to provide downstream siltation protection during construction. In the event such protection is inadequate, it will be the developer's responsibility to remove any downstream siltation prior to the time of final inspection. (See also Section 21, Temporary and Permanent Erosion and Sedimentation Control.)

D. Inspection

The Engineer of Record shall provide for the inspection of all materials used and all work done under these specifications, by assistants and inspectors under his direction. Such inspection may extend to any or all parts of the work and to the preparation or manufacture of materials used, whether within the limits of the work or at any other place. The Contractor shall furnish the Engineer of Record all information relating to the work and to the materials which the Engineer of Record may deem necessary or pertinent and with such samples of materials as may be required. The Contractor shall, at his own expense, supply labor and assistance as may be necessary in handling material for proper inspection.

1. The representatives of the City, Engineer of Record and any State, Federal or other agency having jurisdiction over the work, shall have access to the work wherever it is in preparation or progress, and the Contractor shall provide proper facilities for such access and inspection.

2. City of Tavares Inspectors shall be authorized to inspect all work done and all materials furnished, including preparation, fabrication and manufacture of the materials to be used.

The City will periodically visit the project site to observe the progress of the work and methods of construction. Upon observation of work not done in accordance with the plans and specifications, the City will notify the

developer's contractor, and request that necessary corrections be made or tests performed to assure compliance with the specifications, at no cost to the City.

All projects shall be subject to inspection during and upon completion of construction by an authorized representative of the City. Presence or absence of an inspector during the construction does not relieve the Owner and/or Contractor from adherence to the approved plans and specifications. The Inspector may reject materials or suspend work until questions at issue can be referred to, and decided by, the City's Project Manager or designated representative. The Inspector shall not be authorized to alter or waive requirements of the Drawing and Specifications.

The work shall at all times be subject to inspection by authorized representatives of the City, and materials and/or workmanship found not meeting the requirements of approved plans and specifications shall be immediately brought into conformance with said plans and specifications.

An authorized representative of the City shall make final inspection of the project after completion to determine acceptability of the work. Before this final inspection can be made, the Owner/Contractor shall notify the City in writing that the work has been completed in accordance with the approved plans and specifications.

3. The Contractor shall furnish all necessary facilities and assistance to make any examination of the complete work if such examination is deemed advisable by the Engineer of Record. If any of the work is found defective in any respect, the Contractor shall defray the expense of the examination and satisfactory reconstruction. If the work is found acceptable, the expense of the examination shall be added to the Contractor's final estimate.

4. Work covered up without consent or approval of the City must, if required by the Inspector, be uncovered for examination and properly restored at the Contractor's expense.

5. If the Specifications, the Engineer of Record's instructions, codes, laws, ordinances, or any public authority require any work to be specially tested or approved, the Contractor shall give the Engineer of Record timely notice of its readiness for inspection; and, if the inspection is by an authority other than the Engineer, of the date fixed for such inspection.

6. Final Inspection: Upon notice from the Contractor that work is complete, the Engineer of Record and City will make a final inspection, and will notify the Contractor in writing of all defective, incomplete or otherwise

unacceptable work revealed by the inspection. The Contractor shall immediately correct all such deficiencies to the satisfaction of the Engineer of Record and the City. The Engineer of Record will then certify the project in writing to FDEP or appropriate regulatory agency, and request a final regulatory agency inspection.

E. Verification of Dimensions and Elevations

Dimensions and elevations indicated on the drawings in reference to existing structures, location of utilities, sewer inverts, or other information on existing facilities, are the best available data obtainable but are not guaranteed by the Design Engineer. The Design Engineer or Engineer of Record will not be responsible for their accuracy. Before proceeding with any work dependent upon the data involved, the Contractor shall field check and verify all dimensions, grades, inverts, lines, elevations, or other conditions of limitations at the site of the work to avoid construction errors or damage to existing facilities. If any work is performed by the Contractor, or any subcontractors, prior to adequate verification of applicable data, any resultant extra cost for adjustment of work necessary to conform to existing conditions, or damage to existing facilities, shall be assumed by the Contractor without reimbursement or compensation by the City.

If the Contractor, in the course of the work, finds any discrepancy between the drawings and the physical conditions of the locality, or any errors or omissions in drawings or in the layout as given by survey points and instructions, he shall immediately inform the Engineer of Record, in writing. The Engineer of Record will promptly investigate the reported conditions and, after City approval, shall issue such instructions as may be necessary for the proper execution of the work. Any work done after such discovery and prior to receipt of such instructions shall be at the risk of the Contractor.

F. Care of Existing Facilities

In executing the work, the Contractor shall exert every effort not to damage any existing utilities or the City's existing facilities or to break into them. Any damage that is done thereto shall be promptly repaired by the Contractor or by the Owner, at the Owner's option, and at the Contractor's expense. Damage to City of Tavares Water System lines shall be repaired by the Tavares Water System, at the Contractor’s expense. The contractor shall not interrupt or interfere with the operation of existing utilities or facilities during construction except when absolutely necessary. When this is the case, the Contractor shall consult with the Engineer of Record, City and the utility company as to procedure, and shall be governed by their decision. Any damage done shall be promptly reported to the affected utility for repair. Damage to City of Tavares existing facilities sanitary system shall be repaired promptly.

1. The Design Engineer does not guarantee that all existing facilities such as buildings, fences, pipelines, electrical lines, conduit, telephone cable, service connections, or other facilities are shown on the plans. It shall be the Contractor's responsibility to locate and protect all such existing facilities prior to beginning construction.

2. Contractor's Responsibilities. Contractor shall conduct his operations in a manner and sequence which will provide for the continued transportation of wastewater flows during construction of this project. Contractor shall take all actions required to prevent discharge of sewer flow from the system to the ground or any stream. Any construction actions that impede or interrupt flow shall be carefully executed and monitored to prevent surcharging and overflow.

3. Any existing surface or subsurface improvements, such as pavement, curbs, sidewalks, pipe or utilities, footings, or structures (including portions thereof), trees and shrubbery, not indicated on the drawings or noted in the specifications as being removed or altered shall be protected from damage during construction of the project. Any such improvements damaged during construction of the project shall be restored to a condition equal to that existing at time of award of contract.

4. Any such improvements damaged during construction of the project shall be restored to a condition equal to that existing at time of award of contract. All repairs to utility services shall be coordinated with the applicable utility company, and shall be made in strict accordance with their requirements.

G. Connecting to Existing Work

It shall be the express responsibility of the Contractor to connect his work to each part of the existing work or work previously installed as required by the drawings and specifications to provide a complete installation. Connections to existing sewer lines, prior to completion, may be allowed by the City on a case by case basis where requested by the Contractor and approved by the City's Project Manager; otherwise, connections to existing sewer lines shall be made only after all inspections are completed and all punch list items have been adequately addressed. During construction of new sewer lines, no physical connection to any existing pipeline by open channel or sawed off pipe shall be allowed until all lines upstream and/or downstream of connection have been approved for use by FDEP.

1.04 TESTING

A. It shall be the Contractor's responsibility to provide the necessary equipment and personnel for all inspections and testing, including televising the sanitary sewer laterals. This shall include all safety equipment necessary to meet OSHA requirements. Inspections will be cancelled if proper testing or safety equipment is not on site and readily available at the time of the inspection.

B. Access to the work shall be provided by the Contractor for all required inspections. In cases where the Contractor has proceeded with work which the City had requested to inspect or witness without said requested inspection, the Contractor shall bear all costs associated with uncovering, retesting, additional testing, or any other means necessary to provide physical evidence as to the acceptability of the work performed by the Contractor. Such costs shall be the responsibility of the Contractor regardless of whether or not the work is found to be defective or acceptable to the City.

1.05 INSURANCE:

The Contractor shall not start work under this contract until he has obtained all the insurance required under this paragraph and such insurance has been approved by the City. The Contractor shall not allow any subcontractor to start work on his subcontract until the insurance required of the subcontractor has been so obtained and approved. **The City shall be named as additionally insured.**

A. Compensation and Employer's Liability Insurance: The Contractor shall procure and maintain during the life of the contract the statutory Workmen's Compensation and Employer's Liability Insurance for all of his employees to be engaged in work on the project under the contract. The Contractor shall require all subcontractors to provide Workmen's Compensation and Employer's Liability Insurance of all their employees to be engaged in such work.

B. General Public Liability and Property Damage Insurance: The Contractor shall procure and maintain during the life of the contract General Public Liability and Property Damage Insurance, including vehicle coverage, to protect him from all claims for destruction of or damage to property, arising out of or in connection with any operations under the contract, whether such operations be by himself or by any subcontractor under him, or anyone directly or indirectly employed by the Contractor or by a subcontractor under him. The amount of such insurance shall be not less than the following limits of liability.

1. $500,000 for all damages arising out of bodily injury, including death, at any time resulting therefrom, sustained by any one person in any one

accident; and $500,000 aggregate for any such damages sustained by two or more persons in any one accident.

2. $200,000 for all property damage sustained by any one person in any one accident; and $200,000 aggregate for any such damage sustained by two or more persons in any one accident.

C. Special Hazards Insurance: Where special hazards are encountered in the work under this contract, such hazards shall be covered by a rider to the policy or policies required under subparagraph B in an amount not less than those stipulated under subparagraph B. The Contractor shall be responsible for procuring this insurance before performing any work involving special hazards.

D. Flood Insurance: The Contractor shall procure and maintain during the life of the contract adequate flood insurance to cover all work on this project.

E. Certificates of Insurance: Prior to starting any work, the Contractor shall furnish the City with certificates showing the type, amount, class of operations, effective dates and expiration dates of all insurance policies. Each certificate shall contain the following statement: **"The insurance covered by this certificate shall not be cancelled or materially altered, except after ten (10) days written notice has been received by the City."**

F. Railroad Insurance (if required):
Insurance shall be furnished in accordance with CSX or applicable requirements

1.06 FINAL

A. Final Acceptance

The City shall be notified in writing when the project is complete. Upon receiving a written request for final inspection of the completed work, the representatives of the City, together with the representatives of other interested agencies, shall perform the final inspection within two weeks of the receipt of the request.

When facilities qualify as public facilities, the City will accept ownership of the completed facilities when the work has passed the final inspection, proper acquisition documents are completed, and acceptable Record Drawings are submitted to the City. The Record Drawings shall be completed by the Engineer of Record for the project in accordance with Section 24; Record Drawings Final acceptance by the City will be made in writing upon satisfactory completion of the project, including final inspection and submittal of the following documents:

1. Three (3) Print sets of Record Drawings, signed and sealed.

2. One (1) compact disc containing the Record Drawings, in AUTOCAD 2007 or higher Format.

3. Certifications of Completion from all Regulatory Agencies (i.e. Florida Department of Environmental Protection, St. Johns River Water Management District, Florida Department of Transportation, etc.).

4. Recorded easement documents.

5. Maintenance Bond in the amount of 10% or all contributed assets, with a duration of 2 years. Maintenance Bond to be accompanied by a letter prepared by the Engineer of Record documenting the Bond amount.

6. Copies of all approved Testing Results (i.e. Pressure Test, Air Test, Lamping, Mandrel, Densities/Compaction, copy of sanitary sewer videotape, etc.).

7. Results of Bacteriological Sampling on water lines

Final acceptance by the City will be made in writing upon satisfactory completion of the project, including all items above. The Owner/Contractor shall warranty the work for a period of one year from the date of final acceptance and shall immediately correct any deficiencies in the work due to materials and/or workmanship, which occur during the warranty period. The date of final acceptance shall be the date on which the Owner/Contractor has fulfilled all conditions necessary for final acceptance.

B. Changes

All field changes to previously approved construction plans shall be in accordance with these specifications and approved by the City prior to implementation.

C. Maintenance

All items or systems must be designed in such a manner to minimize future maintenance. A two-year warranty on all work shall be furnished to the City at the time of final acceptance, along with all warranties and manufacturers' manuals for all items to be maintained by the City. Warranties shall be extended by six months from the date of any repair to warranted items. All disturbed earthen areas shall be sodded prior to acceptance. The City shall be provided five-year warranties on all pumps, motors, electrical panels, etc. by the manufacturer prior to final acceptance by the City.

D. Transfer of Private Ownership

When transfer of private facilities to public ownership takes place, all such private facilities shall be brought up to the current City standards at no cost to the City insofar as construction and maintenance are concerned, before the City will accept such facilities. The City is to be furnished copies of all approvals; permits, certificates of completion, etc., to or from completion, etc., to or from other agencies such as Lake County, Florida Department of Environmental Protection, St. Johns River Water Management District, Florida Department of Transportation, railroads, etc., before proceeding with construction. Proof of satisfactory completion of water and sewer facilities, positive water bacteriological tests, and submission of quit claim deeds, bills of sale, prior and current permits, warranties, manufacturers manuals, and a two year maintenance bond shall be furnished to the City prior to acceptance.

E. Property Ownership

All facilities to be owned or maintained by the City shall be located on City property, within City right-of-way, or on easements dedicated to the City for the uses intended.

END OF SECTION

SECTION 7
UTILITY EXCAVATION, TRENCHING, AND BACKFILLING

1.01 SCOPE

A. The provisions set forth in this section shall be applicable to all underground water, sewer and reuse piping installations, regardless of location, unless prior approval is received from the City for special design consideration.

B. It shall be the Contractor's responsibility to acquaint himself/herself with all existing conditions and to locate all structures and utilities along the proposed utility alignment in order to avoid conflicts. The Contractor shall examine the site before submitting a bid, taking into consideration all conditions that may affect the work.

C. Where actual conflicts are unavoidable, work shall be coordinated with the City and performed so as to cause as little interference as possible with the service rendered by the City disturbed.

D. The Contractor is responsible for providing all materials, equipment, labor, and work necessary to completely construct the project in accordance with the Contract Documents. This work includes but is not limited to the following:

1. Excavating and removing unsatisfactory materials.
2. Preparing trench foundations.
3. Providing satisfactory material for all trenches as specified and as required.
4. Obtaining, storing, maintaining, and disposing of materials.
5. Dewatering, shoring, and sheeting.
6. Placing, compacting, testing, final grading, and subgrade demolition.
7. Performing all other work required by the Contract Documents.

E. The Contractor is responsible for performing all work so as not to damage existing roadways, facilities, utilities, structures, etc., and shall repair and replace such damage to equal or better than its original undamaged condition without cost to the City.

F. The Contractor shall coordinate all additional subsurface investigations and testing included with this work with the Engineer of Record before performing the excavation and foundation preparation work. In general, if different and unsuitable/unsatisfactory soil conditions are found during the Contractor’s work, the Engineer of Record and the City shall be notified immediately.

G. Work site cleanup and property restoration shall follow behind construction operations without delay. Some of this clean up will be done on a daily basis, as needed, usually at the end of the workday.

1.02 REFERENCE STANDARDS

Reference standards and recommended practices referred to in this Specification Section shall be the latest revision of any such document in effect at the bid time. The following documents are a part of this Section. Where this Section differs from these documents, the requirements of this Section shall apply:

A. OSHA Excavation Safety Standards, 29 CFR 1926, Subpart P

B. Florida Trench Safety Act (Law of Florida 90-96)

C. American Society for Testing and Materials (ASTM)

1.	ASTM D 1556	(1990) Density of Soil in Place by the Sand-Cone Method
2.	ASTM D 1557	(1991) Test Method for Laboratory Compaction Characteristics of Soil Using Modified Effort
3.	ASTM D 6938	Standard Test Methods for In-Place Density and Water Content of Soil and Soil Aggregate by Nuclear Methods (Shallow Depth)
4.	ASTM D 2937	(1990) Standard Test Method for Density of Soil in Place by the Drive-Cylinder Method
5.	ASTM D 3282	(2004) Standard Practice for Classification of Soils and Soil-Aggregate Mixtures for Highway Construction Purposes
6.	ASTM D 3740	(1988) Standard Practice for Evaluation of Agencies Engaged in the Testing and/or Inspection of Soil and Rock as Used In Engineering Design and Construction
7.	ASTM E 329	Agencies Engaged in Construction Inspection and/or Testing
8.	AWPA C1	(1991) All Timber Products—Preservative Treatment by Pressure Processes
9.	AWPA C3	(1991) Piles—Preservative Treatment by Pressure Processes

1.03 GENERAL

Trench excavation shall be confined to the construction area as shown on the plans, and shall be done in an approved manner with proper equipment. Excavation and backfilling shall be suspended during rain and inclement weather, or when unsatisfactory field conditions are encountered, unless otherwise directed by the Engineer of Record. At all times during

construction, Contractor shall maintain proper drainage in the construction area, and shall take all measures necessary for erosion and sediment control.

A. Existing Utilities: The Contractor shall be solely responsible for locating and verifying the location of all existing utilities. The Contractor shall take every precaution to protect existing utilities from damage during construction operations. If damage occurs, the utility involved shall be promptly contacted and repairs made at their direction and at the Contractor's expense. The work shall meet the approval of the utility involved. If the respective utility desires to make repairs with its own forces, the Contractor shall bear all the expenses of the work.

B. When interruptions of existing utilities occur, temporary service shall be provided as directed and approved by the respective utility involved.

C. Notification of intent to excavate:

1. Florida Underground Facility Damage Prevention and Safety Act (F.A.C. Chapter 556) requires persons to ascertain the location of underground public utility property prior to excavation or demolition in certain situations. The Act also requires such persons to give timely notice of intent to excavate or demolish prior to commencing such operations. Failure to comply could subject the violator to a civil penalty for each violation of the Act.

2. Notification of intent to excavate may be given by calling the Sunshine State One Call of Florida (SSOCOF) at this toll free number: (800) 432-4770 or 811, to call for location of underground facilities.

D. If existing utilities are found to conflict with the permanent facilities being constructed under this Section, immediately notify the Engineer of Record and secure his instructions.

E. Do not proceed with permanent relocation of utilities until written instructions are received from the Engineer of Record.

F. Protection and Restoration of Property: During the course of construction, the contractor shall take special care and provide adequate protection in order to minimize damage to vegetation, surfaced areas, and structures within the construction right-of-way, easement or site, and take full responsibility for repair or replacement thereof.

G. Material Disposal: Excess, unsuitable, or cleared or grubbed material resulting from the utility installation shall be removed from the work site and disposed of at locations secured by the contractor. Excess excavated material shall be spread on

the disposal site and graded in a manner to drain properly and not disturb existing drainage conditions.

1.04 TRENCH EXCAVATION:

Excavate to subgrade elevations regardless of the character of surface and subsurface conditions encountered. Unclassified excavated materials may include rock, soil materials, and obstructions. No changes in the Contract Sum or the Contract Time will be authorized for rock excavation or removal of obstructions. If excavated materials intended for fill and backfill include unsuitable soil materials, replace with satisfactory soil materials.

A. Trenches for pipe shall be excavated along the lines designated by the Engineer and to the depths necessary for laying pipe to the required grades.

1. Do not excavate trench more than 200 feet ahead of pipe laying, unless permitted by the Engineer of Record.
2. Where trenching takes place in existing concrete or asphalt pavement, the pavement shall be saw cut 5 feet wider on each side of the trench than the top width of the trench, unless otherwise noted on the drawings. Ragged edges of pavement shall be recut as required prior to paving to form a straight and uniform alignment.
3. The minimum width of the trench shall not be less than the outside pipe diameter plus 1 foot, and the maximum width of trench, measured at the top of the pipe, shall not exceed the outside pipe diameter plus 2 feet, unless otherwise shown on the drawing details, or approved by the City.
4. Maximum trench width up to a level 24 inches above the top of the pipe shall be as shown on the plans.
5. Sides of trenches shall be kept as nearly vertical as possible. In order to prevent damage to property, injury to persons, erosion, cave-ins, or excessive trench widths, adequate sheeting and bracing shall be provided in accordance with standard practice and in accordance with all safety, protection of property, and other applicable laws and regulations, including the Florida Safe Trench Act.

6. Excavated material to be used for backfill shall be neatly deposited at the sides of the trenches where space is available. Where stockpiling of excavated material is required, the contractor shall be responsible for obtaining the sites to be used.
7. Utilities shall be laid "in the dry" unless otherwise approved. Dewatering systems shall be utilized in accordance with good standard practice and must be efficient enough to lower the water level in advance of the excavation and maintain it continuously to keep the trench bottom and sides firm and dry. Any dewatering equipment to be utilized in a residential area shall be equipped with a sound attenuating enclosure and approved by the City. All machinery required for pumping or bailing shall

be furnished by the Contractor. Sump and pump type trenching may be used only on short shallow runs where well points would be impractical and excessively expensive, and only with the prior approval of the applicable Regulatory Agency. In all cases, density testing up to a point at least one (1) foot above the water table shall be completed prior to removal of dewatering equipment. On sewer lines installed using dewatering, service laterals shall be installed while the trench is dry. Disposal of water after removal shall be satisfactory to the Engineer of Record. There will be no disposal into existing sewer.

B. Before excavating the trench, the Contractor shall perform surface preparation including clearing and grubbing,

C. The Contractor shall be required to fully comply with all applicable OSHA Excavation Safety Standards and to abide by them as covered under the Florida Trench Safety Act (Laws of Florida 90-96), effective October 1, 1990.

D. The Contractor shall ensure that mechanical equipment used for trench excavation shall be of a type, design, and construction and shall be so operated that conduit/utility, when accurately laid to specified alignment, will be centered in the trench with adequate clearance between the conduit/utility and sidewalls of the trench. Undercutting the trench sidewall to obtain clearance will not be permitted.

E. The Contractor shall not use mechanical equipment in locations where its operation would cause damage to trees, buildings, culverts, other existing property, utilities, structures, etc. above or below ground. In all such locations, the Contractor shall use hand excavating methods.

F. The Contractor shall not use blasting.

G. The Contractor shall cut trenches sufficiently wide to enable proper installation of services and to allow for testing and inspection. The Contractor shall also trim and shape trench bottoms and leave them free of irregularities, lumps, and projections. Trench width shall be excavated as specified on the Contract Drawings.

H. The Contractor shall construct trench walls so as to avoid side wall collapse or sloughing. Trenches shall be either braced or open construction in accordance with the Contract Documents. No separate payment will be made for any special procedure used in connection with the excavation.

I. Where sheeting and bracing are not required, the Contractor shall construct trench walls in the bottom of the excavation as vertical as possible to the maximum height allowable by OSHA. Trench walls above this height shall be sloped to

guard against side wall collapse or sloughing as specified on the Contract Drawings.

J. Where sheeting and bracing are required, the sheeting and bracing system shall meet the requirements specified in these Specifications.

1. No wood sheeting shall be left in place.
2. Steel sheeting to be left in place shall be as specified in ASTM Designation A328.

K. Excavations shall be to the design elevations shown on the Contract Drawings or as specified, unless unsatisfactory or unsuitable foundation materials are encountered in the bottom of the excavation. Where unsatisfactory or unsuitable foundation materials are encountered, this material shall be undercut and removed as indicated on the Contract Drawings and replaced with satisfactory soil material meeting all the requirements for Bedding. The lift thicknesses and compaction requirements for the replacement soil shall also meet the requirements for Bedding.

L. The Contractor shall be careful not to overexcavate except where necessary to remove unsatisfactory or unsuitable materials, irregularities, lumps, rock, and projections. Unnecessary overexcavation shall be replaced as specified in these Specifications at the Contractor's sole expense.

M. The Contractor shall accurately grade bedding soil materials at the bottoms of the trenches to provide uniform bearing and support for each section of conduit/utility at every point along its entire length except where it is necessary to excavate the bedding for conduit/utility bells (e.g., pipe bells), etc. or for proper sealing of conduit/utility joints. Abrupt changes in grade of the trench bottom shall be avoided.

N. The Contractor shall dig bell holes and depressions after the bedding has been graded to ensure that the conduit/utility rests on the prepared bedding for as much of its full length as practicable. Bell holes and depressions shall be only of such length, depth, and width as required to make the joint.

O. The Contractor shall do the following:

1. Pile all excavated material in a manner that will not endanger the work or erode the stormwater management facilities or water courses.
2. Avoid obstructing sidewalks, driveways, and plant facilities.
3. Leave hydrants, valve pit covers, valve boxes, or other utility controls unobstructed and accessible.

4. Keep gutters, drainage inlets, natural water courses, and miscellaneous drainage structures clear or make other satisfactory provisions for their proper operation.

P. The Contractor shall keep all satisfactory materials that are suitable for use/reuse in the trench construction separated from unsatisfactory materials.

Q. Except where otherwise authorized, indicated, or specified, the Contractor shall replace, at the Contractor's own expense, all materials excavated below the bottom of concrete walls, footings, slabs on grade, and foundations with concrete or flowable fill, as directed by the Engineer of Record.

R. The Contractor shall adhere to these Additional Excavation Requirements for piping:

1. Excavate trenches so that the piping can be laid to the lines, grades, and elevations indicated on the Contract Drawings.
2. For piping designated to be laid to a minimum cover requirement, grade trenches to avoid high and low points to the extent practical. As-built drawings of such pipes shall present top-of-pipe and grade elevations at all high and low points along each pipe segment, at the end points of each pipe segments, and at intervals not to exceed 100 feet along each pipe segment. If, in the opinion of the Engineer of Record, additional air release and/or vacuum relief valves are required, the Contractor shall install the additional items as directed by the Engineer of Record.
3. The cover over PVC pipe shall not be less than 3 feet. Where the cover is less than 3 feet, that section of pipe shall be ductile iron pipe.
4. Where trenching occurs in existing lawns, and seeding is not an option, replace area with sod in accordance with Section 20, Grassing and Sodding.
5. Where trenching takes place in existing concrete or asphalt pavement, the pavement shall be saw cut at the full trench width plus 5 feet on either side as shown on the City of Tavares Standard open cut and repair detail. Ragged edges of pavement shall be re-cut as required prior to paving to form a straight and uniform alignment.
6. Sides of trenches shall be kept as nearly vertical as possible. Maximum trench width up to a level 24 inches above the top of the pipe shall be as shown on the plans.
7. Water which is found in or accumulates in trenches shall be pumped, bailed or otherwise removed. All machinery required for pumping or bailing shall be furnished by the Contractor. Trenches shall be kept free of water while pipe is being laid. Disposal of water after removal shall be satisfactory to the Engineer of Record. There will be no disposal into existing sewer.

8. Continue dewatering operations along each pipe segment until the required minimum cover is provided. During the dewatering operations, the ground water level in the trench shall remain at all times a minimum of 1 foot below bottom of trench excavations.

S. The Contractor shall adhere to this Additional Excavation Requirement for Appurtenances:

1. Ensure that excavations for valves and similar appurtenances shall be sufficient to leave at least 12 inches in the clear between the outer surfaces and the embankment or timber used to hold and protect the walls.

T. The Contractor shall adhere to this Additional Excavation Requirement Roadway and Pavement Restoration:

1. Open cuts of City streets are expressly prohibited. However, hardship waivers may be granted at the sole discretion of the Public Works Director, in accordance with the requirements of this section. Restoration shall be as required by the Public Works Director, taking into account factors such as age of existing roadway, density of traffic, location, etc.
2. Pavement or roadway surfaces cut or damaged shall be replaced by the contractor in equal or better condition than the original, including stabilization, base course, surface course, curb and gutter, or other appurtenances. The contractor shall obtain the necessary permits and all applicable authorizations from the proper agencies prior to any roadway work. Additionally, the contractor shall provide advance notice to the appropriate authority and local emergency services agencies, as required, prior to construction operations.
3. Restoration shall be in accordance with requirements set forth by the City. The materials of construction and method of installation, along with the proposed restoration design for items not referred to or specified herein, shall receive prior approval from the City.
4. Where existing pavement is removed; the surfacing shall be mechanical saw cut prior to trench excavation, leaving a uniform and straight edge, with minimum disturbance to the remaining adjacent surfacing. The width of cut for this phase of existing pavement removal shall be minimal.
5. Immediately following the specified backfilling and compaction, a temporary sand seal coat surface shall be applied to the cut areas. This temporary surfacing shall provide a smooth traffic surface with the existing roadway and shall be maintained until final restoration.
6. Density tests shall be provided for trenches in pavement across roadways as specified in Section 7.07.

1.05 CLASSIFICATION OF EXCAVATION:

The Contractor shall provide borrow soil materials when sufficient satisfactory soil materials are not available from excavations. All excavation shall be unclassified, except as otherwise specified below.

A. Materials used for trench construction shall be free of clumps of clay, rock or gravel, debris, waste, frozen materials, and other deleterious matter as determined by the Engineer of Record and shall be satisfactory soil materials as follows:

Area Classification	Soil Materials
In excavations and trenches	Excavated and borrow material that has been sampled, tested, and approved as "Satisfactory Soil Material."

B. Satisfactory Soil Materials

1. Soil Classification Groups

Satisfactory soil materials for each trench shall be as follows:

Satisfactory Soil Material (ASTM D-3282, Soil Classification Groups)		
In-situ Foundation	Bedding, Haunching, and Initial Backfill	Final Backfill
A-1-a A-1-b A-3	A-1-a A-3	A-1-a, A-1-b A-3

2. Maximum Particle Size Limitations for Satisfactory Soil Materials

The maximum allowable particle size for satisfactory soil materials within each trench for each type of utility shall be as follows:

Conduit	Maximum Allowable Particle Size		
	In-situ Foundation	Bedding, Haunching, and Initial Backfill	Final Backfill
Plastic Pipe (PVC, CPVC, HDPE, etc.) less than 6-inch-diameter	See Note 1	1/2 inch	3 inches
Plastic Pipe (PVC, CPVC, HDPE, etc.) 6-inch-diameter and Larger	See Note 1	3/4 inch	3 inches
Concrete Pipe			
Steel Pipe			
Ductile Iron Pipe			

Conduit	Maximum Allowable Particle Size		
	In-situ Foundation	Bedding, Haunching, and Initial Backfill	Final Backfill
Fiberglass Pipe	See Note 1	3/4 inch or 3 times the wall thickness, whichever is less	3 inches
Other Conduit Materials	See Note 2	See Note 2	See Note 2

(1) There is no requirement when satisfactory undisturbed native soil material is used. Disturbed portions of the foundation and/or unsatisfactory native soil material shall be replaced with satisfactory soil materials meeting all the requirements for Bedding.
(2) The maximum allowable particle size shall be in accordance with the manufacturer's written recommendation.

3. Additional Requirements of Satisfactory Materials

Satisfactory soil materials shall be free of debris, waste, frozen materials, vegetation, or other deleterious matter. Soils within 4 inches of the exterior surface of the pipe shall be free of gravel, stones, or other materials which may abrade the pipe surface.

C. Unsatisfactory Materials

Unsatisfactory soil materials shall mean ASTM D 3282, Soil Classification Groups A-2-4, A-2-5, A-2-6, A-2-7, A-4, A-5, A-6, A-7, peat and other highly organic soils; and soil materials of any classification that have a moisture content at the time of compaction beyond the range of 1 percentage point below and 3 percentage points above the optimum moisture content of the soil material as determined by moisture-density relations test.

Soil unsuitable for a proper foundation encountered at or below trench grade, such as muck or other deleterious material, shall be removed for the full width of the trench and to the depth required to reach suitable foundation material, unless special design considerations received prior approval from the City. For rock or other non-crushing material, removal depth shall be 6" below bottom of utility. Backfilling below trench grade shall be in compliance with the applicable provisions of this specification section.

1.06 BEDDING OF PIPE:

Select material for backfill shall be suitable material from the excavation free of large stones, hard lumps, debris and other objectionable material. When rock or other non-crushing material is encountered at trench grade, excavation shall be extended to 6 inches below the outside of the

bottom of the utility, and a cushion of sand to fully cover the pipe or fittings to a minimum depth of 12" shall be provided.

If select material is not available from the excavation, it shall be hauled to the site, placed and compacted at Contractor's expense. All trenches shall be excavated below the established subgrade as required to provide for preparation of trench bottoms in strict accordance with the improved ditch bedding details as shown.

A. Class B (Minimum Utility Bedding): The bottom of the trench shall be shaped to provide firm bedding for the pipe. The pipe shall be firmly bedded in undisturbed soil, or hand shaped so that the pipe will be in continuous contact therewith for its full length.

B. Class A (Special Utility Bedding): Should special bedding be required due to depth of cover, impact loadings, or other conditions, "Class A" bedding methods shall receive prior approval by the City.

1.07 BACKFILLING OF TRENCHES:

Backfilling of trenches shall progress as rapidly as pipe-laying will permit.

A. The Contractor shall not backfill trenches until required tests are performed.

B. Immediately after the pipe has been jointed and inspected, backfilling shall be placed to a minimum of twelve (12) inches above the crown of the pipe to adequately protect the pipe from injury and movement, in accordance with ASTM D2321. Before and during the backfilling of any trench, precaution should be taken against flotation of pipelines therein due to entry of large quantities of water into the trench, which could cause uplift of the pipeline. The diameter deflection of PVC pipe shall not exceed five (5) percent after completion and approval of construction, and for a period of one (1) year thereafter.

C. Backfill material shall be clean earth fill composed of sand, or other City approved fill.

D. Trenches improperly backfilled shall be reopened to the depth required for proper compaction, then refilled and compacted as specified, or the condition shall be otherwise corrected as directed.

E. The Contractor shall perform the following steps to ensure compaction at the bottom of the trench or excavation before bedding:

1. Remove disturbed native soil material and/or any soils not meeting the requirement of satisfactory soil material as indicated on the Contract Drawings.

2. When trenches are cut within the right-of-way and under all roadways, drives (including dirt drives), parking areas and all other areas to be paved, compaction as determined by AASHTO Specification T-180, shall be, for each 12-inch backfill lift, equal to 98 percent of maximum density, with compaction in other areas, not less than 95 percent of maximum density from bottom of trench to 12" above top of pipe and not less than 90% of maximum density from the top of pipe to top of backfill. Density tests shall be provided for trenches within pavement, across roads and areas adjacent to proposed building structures. Backfilling of pipe trench or under and around structures shall be, for each 12-inch backfill lift, compacted to 98 percent of maximum density as determined by AASHTO Specification T-180. One compaction test shall be carried out for each 300 linear feet of pipe and for every 100 square feet of backfill under and around structures, and pavement as a minimum.

F. To backfill below and around pipe to the spring line of the pipe, the Contractor shall do the following:

1. Construct foundation and bedding as indicated on the Contract Drawings before placement of pipe.
2. Install each pipe at proper grade, alignment, and final position.
3. Deposit satisfactory soil material uniformly and simultaneously on each side of pipe in completed course layers to prevent lateral displacement.
4. As fast as the material is placed, it shall be cut under the haunches of the pipe with a shovel and thoroughly compacted with light tamps for the full width of the trench to provide support for the bottom and sides of the pipe, and to hold the pipe in the proper position during subsequent pipe backfilling and compaction operations. Backfilling shall be carried up evenly on both sides in 6-inch lifts to 12 inches above the pipe.
5. Construct haunching of the pipe as indicated on the Contract Drawings.

G. To trench backfill above pipe spring line to finished grade, the Contractor shall do the following:

1. Deposit satisfactory soil material around and above pipe in uniform layers as shown on the Contract Drawings.
2. Backfill and compact trenches from the spring line of the pipe to the top of the trench in completed course layers as shown in the Contract Drawings.
3. Use material previously defined in these Specifications as satisfactory soil material.
4. Compact by hand or mechanical tampers.

H. Protective concrete slabs shall be installed over the top of trenches, where required, to protect the installed pipe against excessive loads across roadways and river/swamp areas, as required by the City.

I. Existing sidewalks and driveways removed, disturbed, or destroyed by construction, shall be replaced or repaired by the contractor at his expense.

J. All pipes installed shall have associated tracer tape and wire installed in accordance with the respective piping specification section.

K. No pipe or piping shall be backfilled until inspected and approved by the City.

L. All piping shall be properly identified in accordance with the respective piping specification section.

M. Backfill around manholes and other structures shall, in general, conform to the requirements for this section, except that no backfill shall be placed around manholes or other structures until all mortar has properly set.

N. The Contractor shall be responsible for final subsidence of all trenches, and shall leave trenches flush with the original ground after all settlement has taken place. Any settlement of backfill below finish grade shall be promptly corrected. Trenches shall be protected against scour due to surface drainage.

1.08 COMPACTION TEST:

A. All backfill will be subject to a compaction test by an independent laboratory selected by the Engineer of Record or City. If compaction fails the test, Contractor shall remove and replace backfill to the satisfaction of the Engineer of Record and the City, and shall also pay for the cost of the re-test.

END OF SECTION

SECTION 8
BORING, JACKING, AND TUNNELING CROSSING

1.01 SCOPE

A. Bored and jacked or tunneled crossings under roadways and railways shall be provided as shown on the plans and as specified herein. The provisions of this Section shall be the minimum standards for the installation of casing pipe by the boring and jacking method for placement of water, sewer, and reuse pipelines. In general, all underground pipelines crossing exiting major City roadways, Florida State highways, Lake County highways, and railroads shall be installed under these traffic-ways within bored and jacked steel casing pipe. All aspects of crossing construction shall conform to the requirements of the Florida Department of Transportation, Lake County, or the Railroad, as applicable. It shall be the responsibility of the contractor to submit the necessary permit documents and data to the appropriate authority and receive approval thereof.

1.02 GENERAL REQUIREMENTS

A. Authorities: All aspects of crossing construction shall conform to the requirements of the Florida Department of Transportation, Lake County Highway Department, or the railroad, as applicable.

B. Insurance: It shall be the responsibility of the Contractor and/or his subcontractor to comply with all insurance requirements of the highway or railroad for work within their right-of-way.

C. Inspection: Crossing construction operations shall be subject to inspection by the City's representative and by the highway or railroad representative, who shall have full authority to stop work if, in the authority's opinion, it would cause damage to the roadway or railway section, or endanger traffic.

D. Additional Requirements:

1. Contractor shall comply with all requirements of the highway or railroad relating to design, specifications, construction, and temporary work including: inspection, watchmen, flagmen, protection of personnel and property, work restrictions, work scheduling, insurance and such other requirements. Where laws or orders of public authority prescribe a higher degree of protection than specified herein, then the higher degree so prescribed shall be deemed a part to this specification. The Contractor shall pay for all costs associated with meeting these requirements, except as otherwise specified.

2. The steel casing pipe within the limits of the highway or railway right-of-way shall be installed to the proper line and grade. The steel casing shall be furnished and installed in accordance with additional requirements specified herein.
3. All work shall be completed to the full satisfaction of the highway or railroad engineer, or the respective authorized representative.
4. For all work on railroad right-of-way, the Contractor shall notify the Railroad Division Superintendent at least 72 hours prior to entering railroad right-of-way to begin construction.
5. Prior to installing the casing pipe, retain at Contractor's own expense the services of a competent civil and/or geotechnical engineer with 5 years demonstrated experience in the design and installation of boring pits, casing pipe, carrier pipe and appurtenances, grouting and dewatering. The aforementioned engineer shall approve and affix his/her stamp to the Contractor's drawings and design concept for the jackings. The drawings and design concept shall include but not be limited to the dewatering, soil stabilization, boring pits, reaction blocks and installation schedule. The Contractor's engineer shall avail himself of all the available information contained on the contract drawings and herein and shall be responsible for making whatever additional investigations of the site and the conditions thereon that he/she may deem necessary.
6. Continuously keep the augering pits' subgrade free from ground and surface waters during the operation and dewater using well points along the length of each jacking alignment. Observed water levels prior to construction are to be below the invert elevation of the augering pits and casing pipe. Groundwater control along and at the face of the casing pipe shall include chemical grout stabilization as required.
7. The Contractor shall be fully responsible for inspecting the location where the pipes are to be installed and shall familiarize himself/herself with the conditions under which the work will be performed and with all necessary details as to the orderly prosecution of the work. The omission of any details for the satisfactory installation of the work in its entirety that may not appear herein shall not relieve the Contractor of full responsibility.
8. Prepare to work at night and on Saturday and Sunday, if required to complete the work and approved by the City, highway department or railroad. After the operation has begun work continuously (24 hours a day) until the complete length of pipe has been installed.
9. If any movement or settlement occurs which causes or might cause damage to existing structure over, along or adjacent to the work, immediately stop any or all work except that which assists in making the work secure and in preventing further movement, settlement or damage. Resume auger boring only after all necessary precautions have been taken to prevent further movement, settlement or damage, and repair the

damage, at the Contractor's own cost and to the satisfaction of the Engineer of Record.

E. Damage:

1. Highway: Repair costs of settlement or other damage to the roadway within a period of two years after completion of boring or tunneling operations shall be the responsibility of the Contractor, at no expense to the City or highway department.
2. Railroad: Existing construction features, structures and facilities damaged or disturbed as a result of the Contractor's operations shall be repaired by the Contractor in a manner satisfactory to the Engineer of Record and the railroad, at no additional expense to the City or railroad, within 1 year after completion of boring or tunneling operations.

F. Blasting:

1. Highway: No blasting will be done without prior written approval of the responsible Highway Engineer. If requested, the Contractor shall furnish the Highway Department with details of the proposed blasting method. Blasting shall comply with all Federal, State and Local regulations pertaining to the use of explosives. If rock is encountered before approaching the shoulder or pavement, the first four series of charges shall be used in determining the amount of controlled blasting to be used before beginning any blasting beneath the shoulders or pavement or the highway; however, if rock is encountered after proceeding beneath the pavement, only small charges shall be used until the proper amount of charge is determined.

2. Railroad: No explosives or blasting will be permitted in connection with boring or tunneling operations without prior written approval of the railroad. When requesting approval to blast on railroad right-of-way, the Contractor shall provide the following at no additional cost to the City and as necessary to comply with railroad requirements.

   a. Certificate of insurance (in the amount required by the railroad) with proof that explosion, collapse and underground coverage is provided. The certificate shall show that insurance coverage is provided for the contractual liability assumed by the City in his encroachment agreement with the railroad.
   b. Blasting procedure (including load, drill and shooting pattern) shall be submitted. If the railroad engages the services of an independent blasting expert to monitor blasting, the cost of this expert will be paid by the City. All other costs associated with

meeting railroad encroachment requirements shall be paid by the Contractor.

G. Submittals: The Contractor shall submit the following to the Engineer of Record at least 8 weeks prior to the scheduled start of any work associated with the construction of augering pits or augering operations, as evidence of compliance with the requirements of this Section. Acceptance of the submitted material by Engineer of Record does not indicate acceptance of responsibility for the means and methods of construction. The Contractor shall be totally responsible for the entire auger jacking operation.

1. Work Plan detailing the equipment, materials, sequence and procedures for boring, jacking and tunneling operations and installation and grouting of the pipe within the casing, including provisions for standby and backup equipment.
2. Qualifications of the Subcontractor.
3. Shop Drawings showing size, location and design calculations for reaction blocks and augering pits, including carrier pipes, pumps and temporary bulkheads.
4. Number and capacities of jacks.
5. Size, arrangement and installation of chemical grout soil stabilization and dewatering equipment.
6. Revisions to shop drawings as necessary to accommodate field conditions and/or comply with the requirements specified herein.

1.03 MATERIALS

A. Carrier Pipe shall be either Pressure Class 350 ductile iron pipe, or, with prior City approval, SR14 or DR18 PVC pipe, with restrained joints and shall additionally meet the piping material requirements specified in the specification section(s) applicable for the type of flow to be conveyed. The carrier pipes shall be supported by casing spacers within the casing pipe.

1. Casing Spacers: Casing spacers shall be a two piece prefabricated unit by a single manufacturer. All casing spacers in a single casing pipe crossing shall be by the same manufacturer. Casing spacers shall have a shell made from either 304 stainless steel, 14-gauge mild steel which has been heat fusion coated with PVC plastic, (PVC coating shall be .01-inch thick over the entire band including the runner studs) or high density polyethylene. Casing spacers on 16 inch and smaller carrier pipe shall have 8-inch-wide steel bands and casing spacers on 18 inch and larger carrier pipe shall have 12-inch-wide steel bands, except high-density polyethylene spacers shall have high density polyethylene bands. All casing spacers for 14-inch and smaller pipe size shall have four 10 gauge or 14-gauge steel risers with

runners and casing spacers for 16 inch and larger pipe shall have six 10-gauge or 14-gauge steel risers with runners (two top and four bottom), except high density polyethylene spacers shall have one riser for every diameter inch of carrier pipe. The runners (risers) shall be either glass reinforced plastic, UHMW polymer or high density polyethylene. All nuts, bolts and washers shall be 304 stainless steel. All risers over 2 inches in height shall be reinforced. Wooden skids are not an acceptable alternate.

B. Jack and Bore Casing Pipe shall be new prime steel pipe conforming to the requirements of ASTM Designation A-139, Grade B and shall be the sizes shown on the plans. Casing pipe sections shall have beveled ends with a single v-groove and shall be full penetration butt welded on the outside of the casing pipe in accordance with the applicable portions of AWWA C206 and AWS D7.O for the field welded water pipe joints. All joints of the steel casing pipe shall be butt welded prior to being subject to the jacking operation. The welded joints shall be wire brushed and painted with bitumastic enamel coating in accordance with AWWA C203. Steel casing pipe shall have a minimum yield strength of 35,000 ps, be equipped with grout holes as specified herein, be designed to withstand Cooper's E-80 railroad loading where the steel casing pipe crosses under railroad tracks and conform to AWWA C200 and ASTM A53. Steel casing pipe shall be painted inside and outside with two coats bitumastic enamel coating paint in accordance with AWWA C203.

1. The inside diameter of the casing pipe shall be such as to allow the carrier pipe to be removed subsequently without disturbing the casing or the roadbed. For steel pipe casing, the inside diameter of the casing pipe shall be at least 2 inches greater than the largest outside diameter of the carrier pipe joints or couplings, for carrier pipe less than 6 inches in diameter; and at least 4 inches greater for carrier pipe 6 inches and over in diameter. The minimum casing pipe size and wall thickness shall be as shown in the following table for the carrier pipe size indicated.

Carrier Pipe Nominal Inside Diameter (inch)	Casing Pipe Nominal Inside Diameter (Inch)	Coated or Catholically Protected Casing Pipe Nominal Wall Thickness (Inch)	Uncoated or Unprotected Casing Pipe Nominal Wall Thickness (Inch)
4	10	0.188	0.188
6	14	0.188	0.250
8	16	0.219	0.281
10	18	0.250	0.312
12	20	0.281	0.344
14	22	0.281	0.344
16	26	0.312	0.406
18	28	0.375	0.438

Carrier Pipe Nominal Inside Diameter (inch)	Casing Pipe Nominal Inside Diameter (Inch)	Coated or Catholically Protected Casing Pipe Nominal Wall Thickness (Inch)	Uncoated or Unprotected Casing Pipe Nominal Wall Thickness (Inch)
20	30	0.406	0.469
24	34	0.469	0.532
30	40	0.531	0.594
36	46	0.594	0.657

For casing pipe crossings under roadways, railroads, or other installations not within the jurisdiction of the City, the contractor shall comply with the regulations of said authority in regard to design, specifications and construction. However, in no case shall the minimum casing pipe diameter and wall thickness for a specific carrier pipe size be less than that specified in the above table.

C. Steel Liner Plate for tunnels: For sizes greater than 48-inch diameter, steel liner plate shall be used. Steel Liner Plate for tunnels shall be fabricated from structural, hot rolled, carbon-steel plates conforming to ASTM A1011 and of the four-flange type 10 gauge, or the two-flange type 12 gauge, with lap seam longitudinal joint, with ultimate tensile strength of 42,000 psi and yield strength 28,000 psi. Liner plates shall be galvanized in accordance with AASHO M167 and bituminous coated in accordance with AASHO M190. Thickness of liner plate shall be not less than 0.105 inch (12 gage).

1. Bolts, nuts, washers and other accessory hardware shall be hot-dipped galvanized in accordance with ASTM A153.
2. Grout holes shall be provided in the liner plate at not more than 4'-6" centers along the tunnel and staggered around the circumference of the liner. Grout holes shall be threaded with cast iron plugs.

D. Cement grout shall consist of a mixture of about 1 part cement to 2 parts sand which shall be subject to increase or decrease in the amount of cement necessary or as permitted, to provide good flowing characteristics.

E. Sand fill shall be of such sizes that when dry 100 percent by weight shall pass a No.20 sieve and not over 5 percent by weight shall pass a No. 100 sieve.

F. Mortar shall consist of 1 part cement, 1/4 pan lime, and 2 parts sand. Sand shall comply with ASTM C1 lime shall comply with ASTM C207, Type 5; cement shall comply with ASTM C150. Type II.

1.04 INSTALLATION

A. Casing pipes crossing under City roadways shall be located at suitable approved alignments in order to eliminate possible conflict with existing or future utilities

and structures, with a minimum of 36-inch depth of cover between the top of the casing pipe and surface of the roadway where practicable.

B. For casing pipe crossings under roadways, railroads, or other installations not within the jurisdiction of the City, the contractor shall comply with the regulations of said authority in regard to design, specifications and construction. However, in no case shall the minimum casing pipe diameter and wall thickness, for a specific carrier pipe size will be less than that specified in this specification.

C. Bored, jacked, or tunneled installations shall have a bore hole essentially the same as the outside diameter of the pipe plus the thickness of the protective coating.

D. Carrier Pipe shall be installed in a manner to provide proper line and grade. Carrier pipe shall be adequately anchored to prevent movement, including flotation. Contractor shall submit his proposed method of installation and details of anchorage for the Engineer of Record's approval prior to installation.

E. Casing up to and including 48-inch Diameter shall be bored unless conditions required tunneling. The decision to tunnel for casing of this size will be made by the City based upon available information and following discussions with the Engineer and Contractor. In some cases, casing may be bored initially, with the remaining portion tunneled where conditions encountered require tunneling.

F. Boring and Jacking Pits:

1. Required boring and jacking pits or shafts shall be excavated and maintained to the minimum dimension. Said excavations shall be adequately barricaded, sheeted, braced and dewatered as required. The distance between the edges of the jacking pit and the pavement is 6 feet minimum.
2. Furnish, install and remove, to the extent required, thrust blocks or whatever provisions may be required in driving the casing and carrier pipes forward.
3. Steel rails or beams embedded in the concrete shall be used in the pit for placement and alignment of each piece of steel casing pipe or ductile iron carrier pipe during installation operations.
4. The Contractor shall be fully responsible for the removal of the pits including the breaking up, removing and disposing of concrete, if so required or cutting off of sheeting and furnishing and placing approved fill to the normal subgrade as may be required following the installation operations.

G. Dewatering:

1. Provide sumps, wells or well points around or within the augering pit to maintain the groundwater at least 2 ft below the bottom of the pit.
2. Provide well points along the alignment of the jacked casing pipe to maintain the groundwater at least 2 ft below the bottom of the jacked casing pipe.
3. Provide each dewatering system with adequate protection against pumping fines from the subgrade soils. Should soil particles be observed in the discharge water, modify dewatering operations.
4. Maintain dewatering operations throughout auger/jacking operations.

H. Boring:

1. The boring and jacking operations shall he done simultaneously with continuous installation, until the casing pipe is in final position. Correct line and grade shall be carefully maintained. Add-on sections of casing pipe shall be full-ring butt welded to the preceding length, developing watertight total pipe strength joints. The casing installation shall produce no upheaval, settlement, cracking, movement or distortion of the existing roadbed or other facilities.
2. Casing pipe holes shall be mechanically bored through the soil by a cutting head on a continuous auger mounted inside the pipe. The auger and cutting head arrangement shall be removable from within the pipe in the event an obstruction is encountered. The Contractor shall bear all cost of the bore as well as any corrective action required to meet line and grade requirements shown on the plan.
3. The distance to which excavation is carried ahead of the pipe shall be not more than is absolutely necessary for installation purposes, so that ground settlement adjacent to and within the limits of the pipeline crossing is eliminated. In order to minimize the amounts of voids produced during excavation in the forward end of the casing pipe, a positive stop shall be provided at the end of the casing pipe, which prevents the auger from extending beyond the end of the casing pipe. If voids occur or are encountered outside the pipe, grout holes shall be drilled at 10-foot centers in the top of the casing pipe the voids filled with cement grout at sufficient pressure to fill voids and prevent embankment settlement.
4. If it becomes necessary to abandon an incomplete or unacceptable bore, the abandoned casing shall be capped and filled completely with grout. The abandonment procedure shall be also approved by the highway department or railroad prior to starting abandonment procedure. Abandonment procedures shall be completed prior to moving to another boring location. All costs in connection with an abandoned bore,

including the construction cost and capping and filling costs shall be at the Contractor's expense.

5. The casing pipe shall be adequately protected to prevent crushing or other damage under jacking pressure.
6. Use a steel or concrete jacking ring that allows the jacking pressure to be distributed evenly around the wall of the jacking pipe.
7. The use of a jacking frame shall be required. It shall be fabricated from structural steel members and shall be designed to distribute the stresses from the jacks evenly to the jacking ring.
8. Casing pipe shall be so constructed as to prevent leakage of a substance from the casing throughout its length, except at ends of casing. Casing shall be installed so as to prevent the formation of a waterway under the roadway or railroad, and with an even bearing throughout its length, and shall slope to one end (except for longitudinal occupancy).
9. After the casing pipe has been completely installed, thoroughly clean the interior. Place the carrier pipe within the casing pipe using casing spacers.
10. If a pipe is laid within a 2 horizontal to 1 vertical slope from a point 5.5 ft off of the traffic way centerline, take precaution to keep the soil from running by either sheeting or other approvable methods to the Engineer of Design of the Railroad or Roadway being crossed.
11. After inspection, the ends of the casing shall be filled with 2,500 psi concrete not less than eight inches thick.

I. Tunneling:

1. The completed tunnel liner shall consist of steel liner plates with bolted connections, installed to the required lines and grades and in accordance with the manufacturer's instructions. Excavation shall be controlled so that the space outside the liner plate is held to a minimum.
2. The tunneling shall be conducted continuously, on a 24-hour basis until complete. At any interruption of the tunneling operation, the heading shall be completely bulkheaded.
3. Care shall be taken to insure that all parts of the system are maintained free from dirt.
4. All voids between the liner plate and the tunnel wall shall be filled with grout, containing no more water than necessary, placed under pressure through the grout holes provided in the tunnel liner plates. The grouting operations shall be done with the installation of the liner plates so that at no time will the grouting operations be further than 25 feet from the front end or head of the tunnel construction. Grouting shall be started in the lowest end and proceed continuously to the upper end. At the end of each day's operations, the voids outside installed liner plates shall be grouted whether 25 feet or less.

5. Grout shall be forced, under pressure, into each grout hole. If the grout from one hole flows along the liner plates so as to plug the next hole, the plug shall be opened by punching through the grout so that each hole may be used for grouting. The grouting operation shall be continued at each hole until all spaces outside the liner plates are filled and no grout will flow.
6. Apparatus for mixing and placing grout shall be capable of mixing effectively and stirring the grout and then forcing it into the annular space in a continuous uninterrupted flow.
7. Carrier pipe to be installed within the tunnel liner plates must be braced to sides and top of casing pipe with casing spacers as specified to prevent flotation or motion during the placing of grout.

J. After the carrier pipe is installed within the casing pipe or tunnel, conduct a leakage test on pipe as designated by the Engineer. Any leaks that are discovered during the testing phase shall be repaired to the satisfaction of the Engineer. Once the Engineer is satisfied with the leakage testing results, each end of the casing or tunnel shall be closed with 4-inch masonry or concrete bulkheads, with a drainage opening provided in the lower end to prevent the entrance of foreign material, but to allow leakage to pass in the event of a carrier break.

K. Gate Valves:

1. Gate valves per Section 19 – WATER PIPE, FITTINGS, VALVES, AND APPURTENANCES – shall be installed on each side of the casing as directed by the Utility Department.

END OF SECTION

SECTION 10
GRAVITY SEWERS

1.01 SCOPE

A. This section includes general technical criteria for the design and installation of sanitary gravity sewer systems. The Contractor shall provide all work necessary for the construction and testing of a gravity sewer system. This work shall include the installation of all gravity sewer lines, services, manholes, fittings, and appurtenances as may be required to complete the work as indicated in the plans and as specified herein. The work shall also include such connections, reconnections, temporary service, and all other provisions in regard to existing sewer operations and modifications as is required to perform the new work. All references to Industry Standards (ASTM, ANSI, AWWA, etc.) shall be to the latest revision unless otherwise stated. Sewer Service Connections are specified in Section 10A of these specifications. Only those materials included in the City of Tavares Construction Specifications Manual shall be installed. All materials shall be new unless specifically called for otherwise.

1.02 GENERAL

A. Submittals

All submittals shall be submitted in accordance with the shop drawing submittal requirements as specified in Section 1, General Provisions.

1. Shop Drawings: The Contractor shall submit catalog cut sheets, manufacturer's descriptive literature, and other necessary information to the Engineer of Record for approval before installing pipe and manholes.
2. Certifications: The Contractor shall submit a certification from the pipe manufacturer that the pipe and fittings supplied are new, have been manufactured for this project, and have been inspected at the plant.

1.03 MATERIALS

The materials of construction shall comply with the specific applicable standards set forth under Section 7, "Utility Excavation, Trenching and Backfilling", Section 8, "Boring and Jacking", and Section 19 - Water Pipe, Fittings, Valves, and Appurtenances. The Contractor shall provide all new materials free from defects impairing strength and durability and of the best commercial quality for the purpose specified. All material supplied shall have structural properties sufficient to safely sustain or withstand strains and stresses to which it is normally subjected and be true to detail.

A. Pipe: Pipe material for gravity sewers shall be as shown on the contract drawing. Pipe material shall be in accordance with the design requirements in this

specification section and specification Section 19 - Water Pipe, Fittings, Valves, and Appurtenances, unless otherwise shown on the contract drawings. Pipe supports shall be in accordance with pipe manufacturer's requirements.

B. Precast Concrete Manholes:

1. Precast Concrete Manholes: Manholes shall meet the requirements of ASTM C 478 with the exceptions specified in this Section, and shall consist of precast reinforced concrete riser sections, a monolithic base section, and concentric cones unless otherwise approved. Manholes shall be designed and constructed to withstand a minimum H-20 type loading. Cement shall meet the requirements of ASTM C 150, Type II. Reinforcing steel shall be as shown on the standard manhole detail. Concrete shall meet the minimum compressive strength requirements of 4,000 psi at 28 days. Wall thickness shall be 5 inches minimum. The required minimum strength of concrete shall be confirmed by making and testing three standard cylinders at 7 days. Rings shall be custom made with openings to meet indicated pipe alignment conditions and invert elevations. Submit shop drawings consisting of the manufacturer's standard details of various sections for approval before placing an order for manholes. Drawings of individual manholes showing invert elevations, pipe sizes, and required construction details shall be submitted. Provide certification of proper cure period and Independent Testing Laboratory tests confirming concrete moisture less than 6%. Manhole interior walls, tables and inverts shall be a smooth surface free of voids, depressions, chips, rough edges and high spots. Lifting holes may be provided in each section for ease of handling.

   a. Bases and Slabs: Bases and slabs for manholes shall be precast integrally with the bottom manhole section.
   b. Joints: Joints shall be tongue and groove configuration formed with machined castings. Surfaces shall be exactly parallel with nominal 1/16-inch clearance. "RAM-NEK" sealing compound, conforming to Federal Specification SS S-00210 as manufactured by the Henry Company, El Segundo, CA or approved equal. Cement mortar joints will not be acceptable, except that each joint shall be wiped inside the manhole with cement mortar after assembly. Joints shall be water tight.
   c. Exterior Joint Sealant Membrane: All exterior joints below the top cone section of precast concrete manholes (including base and riser sections) shall be sealed with one 6-inch wide (minimum) exterior joint sealant membrane centered on joint. The tape shall be capable of sealing manhole joints against groundwater and sand infiltration. The installation of the membrane shall be in conformance with the recommendations of the manufacturer. Surface must be smooth, clean, dry and free of voids, loose

aggregate, dirt or other matter that will hinder the adhesion of the membrane. A primer shall be used in accordance with the recommendations of the membrane manufacturer. If recommended by the manufacturer, heat shall be applied to all areas being sealed.

d. Adjustment Rings (Manhole Collars): Adjustment rings shall be 8" wide (48-inch OD X 32-inch diameter opening) concrete. Concrete adjustment rings shall be 4,000 psi (minimum) concrete, Type II cement. Minimum height of rings shall be 2 inches. Rings shall be grouted in place. Concrete mortar (1/2-inch thick) shall be applied to the interior and exterior surfaces of the concrete adjustment rings. The interior of the concrete ring shall be coated as specified. High Density polyethylene (HDPE) rings may be utilized for manholes located in non-traffic areas only (not in streets, parking areas, drive ways etc.). HDPE adjustment rings shall be stackable and have a minimum height of 2 inches and be installed with silicone sealant as per the manufacturer's directions. Apply heavy amount (covering the entire joining surfaces) of silicone sealant between the manhole cone section and HDPE rings, between all stackable rings and between HDPE ring and manhole frame (note: do not use concrete grout during the assembly of HDPE rings). During the installation of HDPE rings, the contractor shall apply downward pressure on the rings to squeeze out the excess silicone (tight fit).

e. Portland Cement: Shall conform to ASTM C 150, Type II. Approved: Atlas; Florida; Lehigh; or equal.

f. Sand: Washed silica sand shall conform to ASTM C 144.

g. Mortar: Consists of one part cement and two parts sand.

2. Manhole Frames and Covers: Sewage manhole frames shall have a minimum 23-3/8-inch opening unless otherwise specified on the drawings and sewage manhole covers shall be of the type as shown in the City of Tavares Standard Details, marked with the word "City of Tavares Sanitary Sewer". Frames and covers shall conform to ASTM A 48, Class 30 (gray iron), or Grade 65-45-12 (ductile iron) meeting the requirements of ASTM A 536, cast in a true symmetrical pattern of tough, dense, and even-grained iron free from warping, scales, lumps, blisters, sandholes, or any defects of any kind. Frames and covers shall be smooth, well-cleaned and given a bituminous coating which is tough and tenacious when hot and not tacky or brittle. All castings shall be manufactured true to pattern, and component parts shall fit together in a satisfactory manner. Machine or grind frames and covers at touching surfaces to provide firm seats and prevent rocking. Cover shall set flush with rim of frame and shall have no larger than a 1/8-inch gap between frame and cover. Remove and replace any set not matching perfectly at no additional cost. Where manholes are constructed in paved areas, frames and covers are to be U.S. Foundry #229 CU or approved equal. To be considered and approved equal, frame and

cover must be interchangeable with approved frames and covers and meet applicable weight criteria. In certain applications, the Utility Department may require locking lids and/or watertight lids. If required, the locking lid shall be a Wedge Camlock only. The Contractor shall provide two special tools to operate the camlock. If a watertight lid is required, the manhole lid shall have an ORS gasket factory installed. The Contractor shall provide 3 loose ORS gaskets as spare parts.

3. Non-shrink Grout: All holes in manholes, provided for their handling, and the annular space between the wall and the pipe coupling adapter shall be thoroughly plugged with Embeco No. 167 Mortar, or approved equal non-shrinking mortar, applied and cured in strict conformity with the manufacturer's recommendations so there will be zero leakage through openings and around pipes. The mortar shall be finished smooth and flush with the adjoining interior and exterior manhole and/or wet well wall surfaces.

4. Coating:

a. General: All manhole exterior and interior surfaces shall be lined and coated as specified in this Section. The Contractor shall use an approved coating and lining subcontractor for all manhole preparation and application of coatings and/or linings.

b. Exterior: The exterior manhole surfaces shall receive two coats of Koppers Bitumastic Black Solution or approved equal.

c. Interior:

(1) Manholes into which force mains discharge, as well as the adjacent manhole downstream from the receiving manhole shall be HDPE lined with an Agru Sure Grip Liner, SewperCoat or Green Monster Liner. These are the only approved manhole liners. No other liners will be approved. The Contractor shall submit shop drawings consisting of manufacturer's standard details of various sections, for approval, before placing order for manholes.

(2) Other manhole interior surfaces shall receive two coats of Koppers Bitumastic 300M Solution or approved equal.

C. Flexible Manhole-to-Pipe Connector

1. The manhole-to-pipe connector shall be manufactured from Neoprene EPDM. The connector shall be a minimum of 3/8-inch thick and shall

conform to ASTM C443 and ASTM C923. The connector shall be resistant to ozone, weathering, aging, chemicals, animal and vegetable fats, oils, and petroleum products and designed to accommodate pipe movement up to 2 inches radically or 22 degrees angularly in any direction.

2. The connector shall be sized for the specific type and size pipe entering and leaving each manhole. The connector shall be precast into the manhole by the manhole manufacturer in accordance with the connector manufacturer's written instructions. A 304 stainless steel band and screw assembly shall be provided to seal the flexible neoprene connector against the pipe. During the invert construction stage, the interior annular space between the exterior of the pipe and the interior of the connector shall be filled with a Type II lean cement grout by the Contractor.
3. Acceptable Manufacturers: Kor-N-Seal, or approved equal.

D. Backfill shall be as specified in Section 7, Utility Excavation, Trenching, and Backfilling.

1.04 DESIGN

The Developer shall comply with the applicable requirements specified within WEF Manual of Practice No. 9, and Chapter 20 or the Ten-State Standards Recommended Standards for Sewage Works and as established by the Florida Department of Environmental Protection.

A. Average Daily Flow (ADF): The sewer system design shall be based on full ultimate development as known, or projected. The average daily flow (ADF) from domestic units shall be calculated at the minimum rate of 250 gallons per day per equivalent residential unit, but should conditions be unfavorable such as high ground water conditions, an additional allowance shall be included for infiltration. Single-family residences shall be computed at the rate of 3.5 persons per connection and multi-family or mobile home dwellings at 2.5 persons per unit. Flow requirements from commercial, industrial, institutional, or other special development areas shall be established from existing records or by estimated projections using the best available data; however, in no case shall a rate of less than 2,000 gallons per acre per day be used, unless specifically approved otherwise. It shall be stated in the Developers Agreement that sizing of the sewer system shall be the responsibility of the Developer, based upon his anticipated use of the land and flows generated therein. Any future upsizing of onsite improvements due to more intensive uses of the land shall be the responsibility of the Developer.

B. Maximum Flow Rates: Gravity sewers shall be designed on the basis of ultimate development maximum rates of flow. The maximum flow ranges from 2.0 as a minimum up to a maximum of 4.0 times the cumulative ADF, depending on the number of houses contributing, as recommended by the Ten States Standards.

C. Sewer Size Computation: Sanitary sewers shall be sized to provide ample capacity for the maximum flow rates. The minimum allowable size for any sewer, other than service connections, shall be 8 inches in diameter. All sewers shall be designed at slopes providing a minimum velocity of not less than 2 feet per second, when flowing full. Sewers 48 inches or larger shall be designed to give mean velocities, when flowing full, of not less than 3.0 feet per second. Said computation shall be based on Manning's Formula using a roughness coefficient ("N") of not less than 0.013, unless justifiably approved otherwise. In general, the following minimum slopes shall be provided for sewer sizes to 24 inches:

Nominal Sewer Size (inches)	Minimum Slope in Feet Per 100 Feet
8	0.4
10	0.28
12	0.22
14	0.17
15	0.15
16	0.14
18	0.12
20	0.11
21	0.10
24	0.08

Minimum slopes slightly less than those indicated may be considered in extreme situations, providing the depth of flow will not be less than 0.3 of the pipe diameter or the velocity less than 1.6 feet per second at design average daily flow, and justifiable reasons for the modification are presented to the City. On any design having slopes less than the “RECOMMENDED minimum”, the design engineer shall submit flow calculations. The maximum allowable slope is 15.0%.

D. Design Considerations

1. Sewers 24 inches in diameter or less shall be installed with straight alignment and grade between manholes, with manhole spacing not to exceed 400 feet for sewers 15 inches or less, and 500 feet for sizes larger.
2. When a smaller sewer joins a larger one, the invert of the larger sewer should be lowered sufficiently to maintain the same energy gradient.
3. All sanitary sewers shall terminate at manholes.

E. Standard Requirements

1. General:

The materials of construction and general installation procedures shall comply with the specific applicable standards set forth under Section 7, "Utility Excavation Trenching and Backfilling", Section 8, "Boring and Jacking" and Section 19 - Water Pipe, Fittings, Valves, and Appurtenances.

2. Pipe:

Buoyancy of sewers shall be considered and flotation of the pipe shall be prevented with appropriate construction where high groundwater conditions are anticipated. Pipe for gravity sewage lines shall be ductile iron or polyvinyl chloride (PVC) as shown on the drawings and as herein specified.

3. Protection of Water Supplies:

a. When wastewater sewers are proposed in the vicinity of any water supply facilities, requirements of the "Recommended Standards for Water Works" (10-State Standards for Water Works) and Florida Department of Environmental Protection shall be used to confirm acceptable isolation distances in addition to the following requirements.

(1) There shall be no physical connections between a public or private potable water supply system and a sewer, or appurtenance thereto which would permit the passage of any wastewater or polluted water into the potable supply. No water pipe shall pass through or come into contact with any part of a sewer manhole.

(2) The contract drawings shall show all existing waterwork units, such as basins, wells, or other treatment units within 200 feet of the proposed sewer. All minimum distances between sewers and all public water supply appurtenances required by the Florida Department of Environmental Protection shall be met.

4. Manholes and Cleanouts:

a. Manholes shall be precast concrete. The minimum inside diameter of manholes shall be 48 inches for sewer sized to 21 inches in diameter or less, with submittal of special designs for larger pipes. Manholes with single inside drops shall be 60 inches in diameter and manholes with double inside drops shall be 72 inches in diameter. Manholes are to be placed at the end of each line; at all changes in grade, size, or alignment; at all intersections; at the end of jack and bore section for gravity sewer lines and at distances not greater than 400 feet for sewers 15 inches or less, and 500 feet for sewers for larger sizes. Cleanouts may be used only for special conditions and shall not be substituted for manholes nor installed at the end of laterals greater than 150 feet in length.

b. All manholes and sewers shall be located in public Rights-of-Way. No manholes or sewers shall be located in side or back lot easements under any conditions.

c. All manholes on private property and not a part of the City of Tavares public sewer system shall have standard manhole covers with the word “SEWER” in the center. Manhole covers with the words “City of Tavares” shall not be permitted on manholes not the responsibility of the City and shall be noted on the plans. Gravity sewers connecting manholes located on private property to City owned and operated manholes shall not be the responsibility of the City and shall not be located in right-of-ways.

d. Sewer clean-outs not in the pavement shall have around their tops in concrete pads, which will be flush with the top of the curb, with minimum dimensions of 18 by 18 by 3 inches. Sewer clean-outs in the pavement shall be DIP up from the service and have around their tops in concrete pads, which will be flush with the top of the finished pavement surface.

e. Manholes shall not be located in drainage swales or any other low area likely to collect or pond water during rains. The top elevation of all manholes shall be greater than or equal to the 100-year flood elevation, unless watertight covers are provided to minimize inflow.

f. Pipe entry shall be at no less than a 90º degree angle from direction of flow of the existing manhole or incoming pipe, unless the inside drop is equal to the diameter of the lower pipe.

5. Drop Manholes:

a. Outside drop manhole shall not be allowed except as specifically authorized by the Utility Director or his Designee.

b. Inside drops shall be secured to the interior wall of the manhole and provide a Tee or Cross access for cleaning. All inside drops greater than one foot require one joint (18 feet minimum of DIP adjacent to the manhole, including 6" stub. Minimum diameter of inside drop manholes shall be 5 feet for single inside drops and 6 feet for double inside drops.

6. Pipe Bedding: Special care shall be exercised in the design and installation to provide adequate bedding for the type of pipe used, taking into consideration trench width and depth, superimposed loadings above grade and the material below trench grade. Pipe loadings capabilities shall be computed in accordance with established design criteria and special supporting bedding or facilities shall be provided as required.

1.05 INSTALLATION

A. The general installation procedures shall comply with the specific applicable standards set forth under Section 7, "Utility Excavation, Trenching and

Backfilling", Section 8, "Boring and Jacking", Section 19 - Water Pipe, Fittings, Valves, and Appurtenances.

B. The Contractor shall install all pipework meeting the requirements of AWWA for installation various types and classes of pipe. Lay all gravity sewers using laser beam methods. Obtain exact grade and alignment for each pipe by measuring to the invert of the pipe. Lay pipe upgrade, beginning at the lower end of the sewer, with pipe bell ends up-grade. Exercise extreme care to keep the pipe in exact alignment and elevation. It is the Contractor's responsibility to, coordinate utility locates with Sunshine State One-Call of Florida, Inc. (#800 /432-4770 or web site www.callsunshine.com), make exploratory excavations, and/or use other methods available to locate existing utilities prior to construction of any gravity sewers. If necessary, the Contractor shall adjust the new sewers and/or laterals, subject to approval by the Engineer, to avoid conflicts with existing piping. If a conflict is found between an existing utility and proposed grade, the Contractor is to furnish the Engineer all pertinent information so that remedial design can be performed. Install pipe joints on each line entering or leaving manhole, including stub lines, as close to the manhole exterior wall as practical. In no case shall the pipe be walked on either before or after the joints have been made. Securely close all openings such as stubs, wyes or other services along the lines by means of approved stoppers that fit into the bells of the pipe and are recommended by the pipe manufacturer. Install stoppers in such a manner that they may be removed at some future time without injury to the pipe bells. No bricking or grouting plugs in lines will be permitted.

C. Reference Points and Layout: The Contractor shall be responsible for setting all grade lines, centerline of construction, and locating property lines. Any reference points, points of intersection, property corners, or bench marks, which are disturbed during construction, shall be restored by a Land Surveyor registered to practice in the State of Florida, and all costs thereof shall be borne by the Contractor. The Contractor shall assume all responsibility for the correctness of the grade and alignment stakes.

D. Handling Pipe and Manholes: Every care shall be taken in handling and laying pipe and fittings to avoid damaging the pipe, scratching or marring machined surfaces, and abrasion of the pipe coating. The lined Pipe and Fittings must be handled only from the outside of the pipe and fittings. No forks, chains, straps, hooks, etc., shall be placed inside the pipe and fittings for lifting, positioning, or laying. If damaged, the material shall be repaired in accordance with the liner manufacturer's recommendations. Any fitting showing a crack and any fitting or pipe which has received a severe blow that may have caused an incipient fracture, even though no such fracture can be seen, shall be marked as rejected and removed at once from the work. In any pipe showing a distinct crack in which it is believed there is no incipient fracture beyond the limits of the visible crack, the

cracked portion, if so approved by the City, may be cut off before the pipe is laid so that the pipe used may be perfectly sound. The cut shall be made in the sound barrel at a point at least 12 inches from the visible limits of the crack. Except as otherwise approved, all cutting shall be done with a power driven cut off saw. All cut ends shall be examined for possible cracks caused by cutting. Keep gaskets away from oil, grease, excessive heat and direct rays of the sun. Keep PVC pipe covered during storage to prevent damage by sunlight. All manhole sections shall be handled and installed in such a manner and by such means as to prevent damage, manhole sections damaged during handling and installation will be rejected as directed by the Engineer, and replaced at no additional cost to the City.

E. Laying Pipe: Pipe shall be installed in accordance with the manufacturer's instructions, at the Engineer of Record's direction. Ductile iron pipe shall be installed in accordance with all applicable provisions of ASTM A746; PVC pipe shall be installed in accordance with ASTM D2321. Take all necessary precautions to prevent the entrance of mud, sand, or other obstructing matter into the pipelines. Lay pipe on bedding prepared in accordance specification Section 7, Utility Excavation, and Backfilling. Provide uniform bearing under the full length of the pipe barrel. Pipe shall be laid to produce a straight line of pipe on a uniform grade. Each pipe shall be laid to form a close joint with the preceding pipe so as to form a smooth inside flow line. Excavate for pipe bells and carefully lay pipe true to line and grade. Make adjustments to line and grade by scraping away or filling in and tamping under pipe barrel and not by wedging or blocking up any portion of the pipe. Any pipe that has its grade alignment or joints disturbed will be taken up and re-laid. All misalignment of pipe shall be corrected by the Contractor at his expense. Take up and relay pipe that has the grade or joint disturbed after laying. The pipe shall not be driven down to grade by striking it with any unyielding object. Abut the spigot end of each pipe against the base of the socket of the adjacent pipe in such a manner that there will be no unevenness of any kind along the bottom halves of the pipes. Compact sufficient backfill, immediately after the pipe has been jointed and inspected, to protect the pipe adequately from injury and movement. Just before jointing the pipes, the mating ends shall be thoroughly cleaned of all dirt, debris, and foreign material. The pipe shall be jointed in accordance with the recommendations of the manufacturer of the pipe and gasket. At the close of each day's work, and at other times when pipe is not being laid, protect the end of the pipe with a close-fitting stopper approved by the Engineer. Replace with sound pipe any defective pipe which may have been laid.

1. Dewatering: Water shall not be allowed in the trenches while the pipe is laid. The use of a dewatering system is a requirement on any runs of pipe where such pipe will be below the ground water elevation at the specific Site. Sump and pump type trenching may be used only on short shallow runs where well points would be impractical and excessively expensive,

and only with the prior approval of the applicable Regulatory Agency. In all cases, density testing up to a point at least 1 foot above the water table shall be completed prior to removal of dewatering equipment. On sewer lines installed using dewatering, service laterals shall be installed while the trench is dry.

2. Backfill and Defection: Immediately after the pipe has been jointed and inspected, backfilling shall be placed in accordance with Section 7, Utility Excavation, Trenching, and Backfilling. Before and during the backfilling of any trench, precaution should be taken against flotation of pipelines therein due to entry of large quantities of water into the trench, which could cause uplift of the pipeline. Upon completion, installed pipe lines shall show a full circle of light when lamped between manholes. The diameter deflection of PVC pipe shall not exceed 5% after completion and approval of construction, and for a period of 1 year thereafter.

3. Compaction: The mechanical compaction of backfill over sewer lines and appurtenances, within right-of-way and under all roadways, drives (including dirt drives), and parking areas shall be in accordance with Section 7, Utility Excavation, Trenching, and Backfilling.

4. Joints: The Contractor shall submit the specific type of joint to be used on all pipe, including complete data on all material to be used, to the Engineer for approval before beginning any pipework. Make all joints conform to the requirements of the manufacturer's printed instructions as approved for the type of joint installed.

    a. All adapters necessary for the proper jointing of pipe shall be provided. Connections to other types of pipe shall be made with a Fernco coupling or approved equal or watertight coupling suitable for application.
    b. PVC Joints shall form a watertight and airtight seal.
    c. Jointing PVC to Vitrified Clay Pipe: Unless specifically indicated otherwise, connections of PVC to vitrified clay pipe in the run of the sewer line shall be made with an approved cast coupling.

5. Pipe Depth: The minimum allowable cover for gravity sewers shall be 3 feet from the top of the pipe to finish grade, unless using DIP. The maximum allowable depth for gravity shall not exceed 18 feet without approval from the City.

6. Horizontal and Vertical Separation:

    a. The horizontal separation between sanitary sewers and existing or proposed water mains shall not be less than 10 feet, measured from

edge to edge, or as specified by FDEP. Where local conditions prevent a lateral separation of 10 feet between new sewer lines and any existing or proposed water main, the sewer may be laid closer than 10 feet to the water main if it is laid in the same trench with the water main located at the side of a bench of undisturbed earth. In either case, the elevation of the top of the sewer pipe shall be at least 18 inches below the invert of the water main.

b. Wherever new sewers must cross under water mains, the sewer shall be laid at such an elevation that the top of the sewer pipe is at least 18 inches below the bottom of the water main. When the elevation of the sewer cannot be buried to meet the above requirements, special protection shall be provided or the water main shall be relocated to provide this separation and reconstructed with ductile iron pipe for a distance of 10 feet on each side of the sewer with one full length of water main pipe centered over the sewer so that both joints are as far from the sewer as possible. Said protection shall consist of completely encasing, 6 inches minimum, the sewer pipe in concrete for a minimum distance of 10 feet each side of the water main, or installation of pressure-tight joint cast or ductile iron pipe for the same dimension.

F. Gravity Sewer Mains: The horizontal separation from existing, proposed, and future structures (including above ground structures, concrete footers and top of bank of ponds) shall be a minimum of 2 times the vertical depth of the deepest portion of the manhole to manhole sewer run.

G. Precast Concrete Manholes: The Contractor shall construct manholes as shown and specified or directed in these documents. Manhole installation shall be as shown and in strict compliance with the manufacturer's printed instructions where specials are used for connections.

1. Manhole tops shall be set to the proper elevation as shown on the plans or as directed by the Engineer and properly anchored to the masonry. Tops shall be adjusted using precast concrete rings. Concrete adjustment rings shall be 4,000 psi (minimum) concrete, Type II cement. Minimum height of rings shall be 2 inches. Rings shall be grouted in place. Concrete mortar (1/2-inch thick) shall be applied to the interior and exterior surfaces of the concrete adjustment rings.

a. Manholes in paved areas shall conform to the crown and grade of the existing adjacent pavement.

b. Tops of manholes in maintained grass areas shall be 3 inches above finished grade, prior approval must be obtained for covers set flush with the ground.

c. Manholes in wooded areas or unmentioned areas shall be a minimum of 18 inches above grade level. Manholes on sloped ground in unmentioned areas shall be a minimum of 18 inches above ground level on uphill side of manhole unless approved otherwise.

2. Riser and top sections shall be installed plumb and such that all manhole steps are in alignment. Joints shall be made in accordance with the manufacturer's recommendations, and to insure a watertight installation.

3. Inverts: Base sections shall be set level on bedding so prepared to prevent settlement and misalignment. Pipe openings shall be placed at the exact elevation and location to receive entering pipes. Base section shall be set such that the center of the manhole will coincide with the intersection of the incoming and outgoing pipes. The resulting angle shall be no less than 90 degrees and so constructed that both halves of an invert-channel shall be of equal length and radius. Manhole bases set off center shall be removed and reset. Shape inverts while manholes are under construction. Lay pipe continuously through manhole, build invert, break out pipe above mid-point, and smooth broken edges with cement mortar or cut off pipe at inside faces of manhole and construct invert to exact shape and size of pipe indicated. Manhole flow channels shall have smooth and carefully shaped bottoms, built up sides and benching sloped no less than ½ inch per foot constructed from concrete. No lateral sewer, service connection, or drop manhole pipe shall discharge onto the surface of the bench. Channels shall conform to the dimensions, grade and alignment of the connecting pipe. The channel walls should be formed or shaped to the full height of the crown of the outlet sewer in such a manner to not obstruct maintenance, inspection or flow in the sewer. Provide a true curve of the largest radius possible for changes in direction of the sewer and entering branch or branches.

4. Clean all joint surfaces (remove all sand, oil, debris and other foreign items) and provide additional primer if recommended by the joint manufacturer.

5. The joint sealant and the manhole surfaces shall be dry during the installation period (shall not be installed if wet or during rain events). Joint sealant is applied to both the top and bottom joint surfaces (Double Ring Method). The joint sealant shall be installed continuously around all joints with the ends placed butt to butt (not overlapped and no open gaps between sealants). The excess joint sealant shall be trimmed flush to the inside surfaces of the manhole. Trim the outside surfaces if an exterior

joint sealant/tape is applied. Manholes with leaking joints (infiltration of ground water) will not be accepted by the City.

6. Prime and double seal joint surfaces with "RAM-NEK" premolded plastic joint sealer or approved equal.

7. All holes in sections used for handling and the annular space between the wall and entering pipes shall be thoroughly plugged with non-shrinking mortar or grout applied and cured in strict conformance with the manufacturer's recommendations so that there will be zero leakage through openings and around pipes. The mortar shall be finished smooth and flush with the adjoining interior and exterior manhole wall surfaces. Provide interior and exterior coating as specified above.

8. Apply a special primer and an "Exterior Joint Sealant Membrane" to the outside surfaces of all manhole joints/seams which are located below the top cone section. Apply the primer and joint membrane in accordance with the recommendations of the membrane manufacturer.

H. Drop Connections: Where shown on the Drawings or directed by the Engineer, the Contractor shall construct inside drop connections to the manholes as shown and specified in this Section. Provide pipe restraints and supports as required. Outside manhole drops are not permitted. For inside manhole drops, inside piping shall be secured to manhole wall by a minimum of two aluminum or stainless steel straps securely anchored to manhole wall. The space between the pipe and opening shall be sealed with a nonshrink grout.

I. Stub Lines: The Contractor shall provide plugged stub lines where shown or directed by the Engineer for the connection of future sewer lines to manholes. Provide bell end closed with an approved stopper. Install bell of stub line as close to the manhole exterior's surface as practical. Accurately reference each stub line size for direction and record, complete with the actual invert elevation. Furnish the Engineer with two copies of the data on stub lines.

J. Cleanouts: Construct as shown in the City of Tavares Standard Details using pipe and fittings as specified in this Section. Applicable portions of these Specifications shall apply to the construction of this item.

K. Connections at Structures: Where sanitary sewers connect to structures, core bore into the existing manholes and use Kor-N-Seal flexible connectors or approved equal with stainless steel straps on all pipe to manhole connectors. The Contractor shall core suitable openings using a coring machine, jigsaw or hole saw into the existing structure or remove the existing pipe to accommodate the pipelines as indicated on the Contract Drawings and as specified. The portion of each existing

structure removed for new installation shall be confined to the smallest opening possible, consistent with the work to be done.

1. Repair – Concrete Structures: After the pipe is installed the Contractor shall carefully close up the openings around the pipe, using non-shrink mortar and repair the existing structure invert, if necessary, in a manner satisfactory to the Engineer. If the existing structure has a specialty coating, repair that coating using coating manufacturer's product and installation requirements.

L. Connecting to Existing Sewers: Where shown on the plans or directed by the Engineer, new sewers shall be connected to existing sewers by constructing a manhole over an existing line or by coring through the wall of an existing manhole. After approval of the new sewer line project by the City, the old sewer shall be broken out and the inverts properly formed. On manholes without turns in direction, it will be permitted to use the lower half of the old pipe as the new invert.

1. For an existing manhole, an opening shall be made and sewer pipe inserted. The opening shall be completely filled around the pipe with non-shrink grout so as to be watertight. A channel shall then be formed over the manhole table, or the table cut through and the channel formed in it, as may be required by the grade.

M. Transition Connections: Where pipes of alternate materials are to be connected between manholes, suitable approved transition couplings shall be installed.

N. Tracer Wire and Warning Tape Installation:

1. General: Wherever non metallic pipe is installed, #8 tracer wire and warning tape shall be installed to facilitate future location of the gravity main.
2. Tracer wires shall begin and terminate in the test boxes or cleanouts. Wire shall run continuously through test stations for the entire length of the pipe line and shall be strapped to the pipe at ten-foot intervals Test boxes shall be installed at each location as shown on the plans, spaced at intervals not exceeding the manhole spacing. Test boxes shall not be installed in streets or driveways. Tracer wire between boxes shall be continuous, unbroken lengths. The tracer wire shall not be installed in tension, but neither shall there be "coils" in the wire. The ends of the tracer wires shall be installed in the test boxes. The length of each tracer wire in each box or cleanout shall be long enough to extend no less than one foot and no greater than two feet above ground level. Breaks shall be repaired by splicing with a

split-bolt clamp or pre approved equal. Repairs by "twisting" the two ends together will not be accepted.

3. Warning tape shall be buried in the backfill approximately one foot over the top of the PVC gravity main. Tape shall be laid in continuous lengths. Any breaks or tears shall be repaired before proceeding with the backfilling operations.

1.06 TESTING

A. General:

1. The Contractor shall inspect all work constructed for faults or defects and any deviation from these documents or omissions shall be corrected at once. The Contractor shall conduct all tests and shall provide necessary equipment and personnel for lamping the system in the presence of the Engineer and the City and/or other authorized agencies with 48 hours' advance notice provided. The Contractor shall bear all costs for these tests and inspections.
2. Pipe testing shall closely follow pipe laying. No more than 1,000 feet of pipe shall remain untested at any time. Testing shall not proceed until all facilities are in place and concrete cured. All piping shall be thoroughly cleaned prior to testing to clear the lines of all foreign matter.

B. Gravity Piping:

1. The contractor will utilize low-pressure air testing in accordance with Uni-Bell PVC Pipe Association, UNI-B-6-90, "Recommended Practice for Low-Pressure Air Testing of Installed Sewer Pipe", latest revisions. Infiltration and exfiltration shall not exceed 0 gallons per day per inch of diameter per mile as measured between manholes. Testing shall proceed for a continuous period of 2 hours, with infiltration amounts measured by methods approved by the Utility Department.

C. Manholes:

1. Manholes shall be true circles of acceptable concrete or masonry work with properly corbeled tops, satisfactory inverts and properly placed frames, covers and steps.

2. Vacuum Testing: All manholes shall be subjected to a vacuum test in accordance with ASTM C1244. The Contractor will furnish all necessary equipment and labor needed for conducting the tests. The Contractor shall

have the option to test manholes prior to backfilling. All manholes tested by vacuum test shall be required as follows:

a. Plug pipes entering and leaving manhole.
b. Apply vacuum to the manhole after setting up of all mortar joints.
c. Draw a vacuum of 10 inches of HG (Mercury).
d. The test shall pass if the vacuum remains at 10 inches HG or drops to 9 inches HG in a time longer than 1 minute.
e. If the manhole fails the test, the Contractor shall locate the leak(s), make proper repairs, and then re-test until a successful test is obtained.

3. High-Voltage Spark Testing: Installed protective lining shall be tested for pinholes after a minimum 24-hour cure at a temperature of 70°F. Pinhole testing shall be accomplished using a Tinker Razor Holiday Detector, San Gabriel, CA, Model AP/W, or an approved equal device. Test voltage of 100-125 volts/mil of coating thickness shall be applied. All pinholes shall be marked and repaired using manufacturer's approved Patch Kit, or other approved method. High-voltage spark testing shall be approved by the product manufacturer.

D. The City may require internal color Close Circuit Television (CCTV) inspection (televising) of the sewer lines at the expense of the developer. The CCTV inspection shall be completed prior to the Contractor paving. The CCTV inspection will consist of a detailed computerized written report along with a DVD recording. The information on the report must coincide with the recording. The start screen of the recording shall have the project name, date, pipe size, contractors name and developer's name. The inspection shall start at the most upstream manhole and work towards the most down stream or existing manhole.

1. CCTV Report Information:

a. Manholes: The report and recording shall start with zero (00+00) station numbers at each manhole upstream and end with the station number at the next down stream manhole. (If an inspection has to be performed starting at the down stream manhole a written explanation must be submitted to the inspector with the report and recording.
b. Pipe Line: Provide start and end station numbers for pipe material changes.
c. Taps: Each tap shall have a station number shown on the recording and coincide with the report and record drawings. The report and

recording shall indicate the lot number and/or address the tap in intended to serve.

d. Dead Ends or Abandonment's: If a future stub, dead end or obstruction cause (not ending in a manhole) or abandonment of video do to obstruction etc, a still image shall be shown on the report and recording for inspection. The report and recording shall show an explanation for what is shown.

e. Existing Sewer System: The existing sewer system must be inspected and shown on the report. The existing system shall be inspected by CCTV prior to its connection to the City's system. This shall be from the tie-in manhole to the next down stream manhole. The City of Tavares reserves the right to request additional CCTV information or reinsertion to insure an acceptable completion. The project inspector also has the right to request a City CCTV crew to inspect any and/or all of the proposed system.

E. Deformation/Deflection Limits: Pipe shall be tested with a nine-point mandrel for deformation or deflection. Any pipe found to be deformed and/or deflected in excess of 5% of the nominal diameter of the pipe shall be removed and replaced with new pipe at no additional cost to the City. All mandrels used in testing shall be available to be checked for proper sizing by use of truing rings at the request of a City Representative. Results of the test shall be submitted to the City for review and approval. The use of a re-rounding device or other similar equipment is not permitted to correct deflected (egg shape) pipe.

F. Manhole Inspection: All manholes shall be inspected for leaks and any defects that may cause infiltration, or weaken the structural integrity. Before the final inspection, manholes shall be trimmed of any excess Ram-Nek joint sealant. Any voids in pre-cast shall be filled with non-shrink grout and the manhole shall be thoroughly painted, excluding invert and bench, as required. The gasket on the manhole cover shall be inspected for cuts, tears, scraps and proper fit. If found damaged, the entire gasket seal shall be replaced in accordance with the manufacturer's recommendation, at Contractor's expense.

G. Warranty Test: To ensure the adequacy of the pipe described above and the manhole installation procedures, the Contractor shall remobilize to the work site 20 months following final approval-acceptance of the complete project, such time being within the 2-year warranty period. The date for such remobilization will be stated in the Final Approval issued by the Engineer of Record.

1. The Contractor together with representatives of the Engineer of Record and the City shall visually inspect every manhole and new line sections installed within the project area for cracks, damaged lining, leaks, or

abnormal conditions. The line sections will be chosen by the Engineer of Record/City at random subsequent to the manhole inspections.

2. The Contractor shall appropriately correct any deficiencies that are found by such visual inspection, as approved by the Engineer of Record. To adequately locate certain deficiencies, the Contractor shall be required to use closed-circuit television inspection and other methods.
3. All costs involved in remobilizing, inspecting, or correcting deficiencies will be considered incidental to the project and shall be the responsibility of the Contractor at no additional cost to the City.

H. Repair of Piping: At the option of the Engineer of Record, if piping is found to be defective during the warranty test period and if the Engineer of Record does not approve a method of pipe repair by the Contractor, the Contractor shall remove and replace the faulty pipe in an approved manner at no additional cost to the City.

END OF SECTION

SECTION 10A
SEWER SERVICE CONNECTIONS

1.01 SCOPE

A. This section covers the requirements for the construction of service connections to City owned lines.

1.02 GENERAL

A. Service connections shall be installed at the locations designated by the contract drawing. All connections and ties to the City's Sewer System will be performed by the Contractor under supervision of the City. Catalog cuts and related date for all material shall be submitted to the Engineer of Record for review.

B. Shown below is a schematic of a typical residential sewer service connection. This schematic shows the locations of both homeowner and City cleanouts and City and homeowners limits of responsibility for the service line.

1.03 MATERIALS

A. All materials used to make service connections shall be compatible with each other and with the pipe materials to be joined and shall be corrosion proof.

B. Fittings shall be as shown in the City of Tavares Standard Details for single and double service connections. Tees will not be allowed.

C. Service Pipe installed as part of main sewer line construction shall be PVC SDR 35, open profile or corrugated pipe conforming to ASTM D3034, F-794 or F-949 with gasketed joints and all required markings consistent with main line material as specified in Section 10, Gravity Sewers.

D. Service Pipe installed by a plumber in conjunction with a main line tap, existing stub out or manhole shall be either ductile iron, or SCH 40 PVC-DWV pipe consistent with the existing stub out pipe.

E. Adapters and Flexible Couplings: Prefabricated polyvinyl joint sealer adapters and sewer pipe couplings shall be similar to those manufactured by Fernco Joint Sealer Company, pipe manufacturer, or equal. Flexible couplings shall be installed with stainless steel bands and adjusting screws.

UTILITY DEPARTMENT

YOUR SEWER PIPE SYSTEM

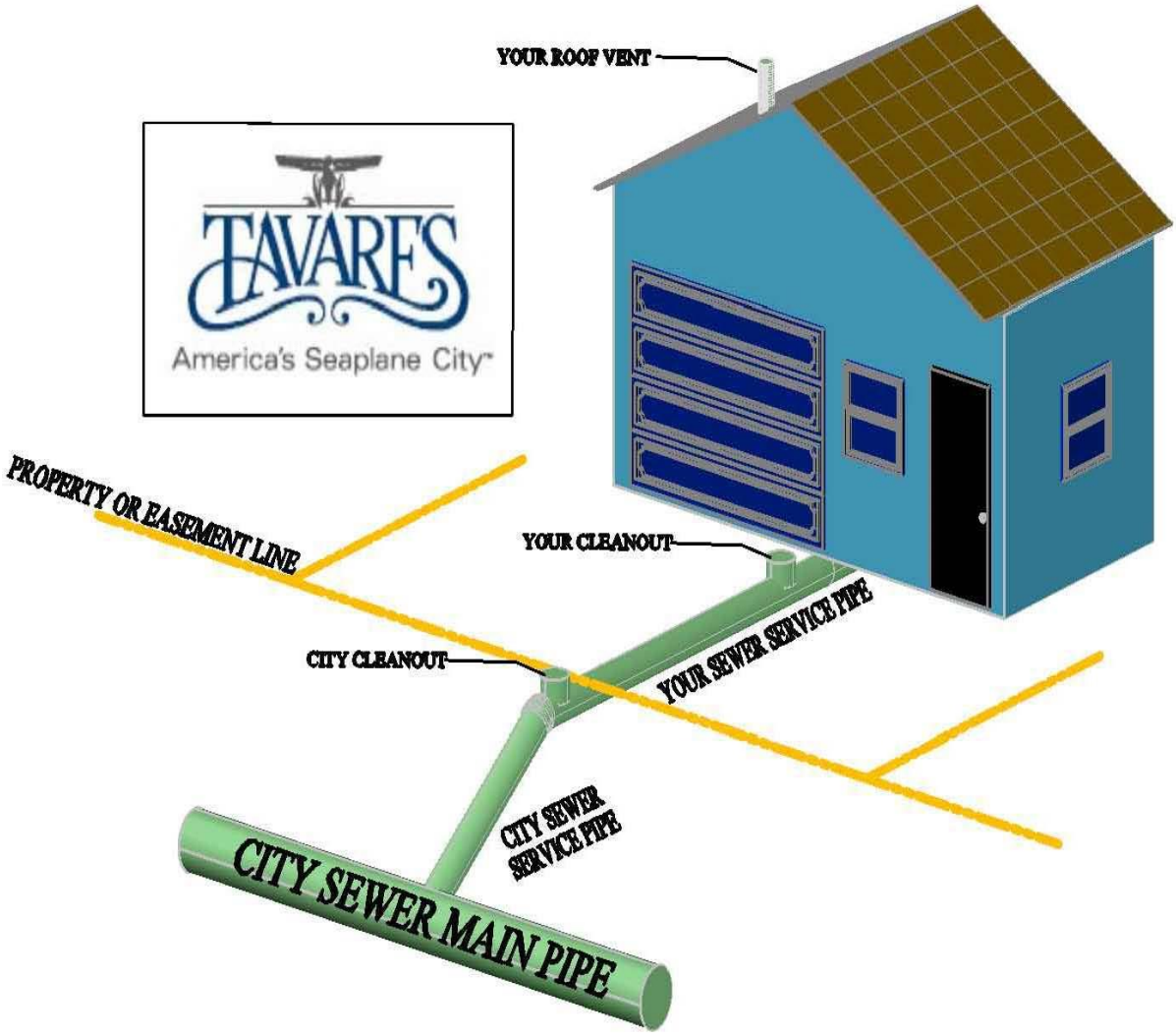

When your sewer backs up in your home or business, the first thing to do is turn off all running water. Look at the other facilities (I.E. sinks, tubs, toilets, etc) and see if they are backed-up as well. If so, look outside and find a cleanout to open and see if it is full of water. If it is dry the problem is internal of the dwelling. We recommend you call a plumber of your choice for further assistance. If the clean out has water holding in it or escaping from the opening call the City for further assistance.

The City of Tavares will check for a cleanout at the edge of the property or easement line. If one is available, the City will snake the line to detect the blockage. In the event the City does not have a cleanout at the edge of the property or easement line, the City staff will check the flow of the up-steam and down-stream manholes for flow variations. If flow appears to be comparable, the customer will need to call a plumber of their choice to assist with further repairs.

Please be advised, the City staff is not permitted to work inside a customers home or business at any time.

If you have any questions, please call us at 516-3530.

F. Service Connection to Existing Lines:

1. Minimum pipe size connection to either existing sewer main lines or manholes shall be 6 inches unless otherwise approved, prior to construction, by the Utility Director or his designee.
2. The saddle shall include a ductile iron saddle casting with corrosion-resistant paint, SBR gasket, 304 stainless steel band with 304 S.S. Adjusting bolts and 304 S.S. Pipe clamp.
3. Taps directly into manholes shall be made using ductile iron or PVC pipe.
4. Non-shrink grout for holes to manholes shall be as specified in Section 10, Gravity Sewers.

G. Manhole Water Stop: Shall be a neoprene gasket and stainless steel clamp similar to water stop and clamp as supplied by the Armco Steel Corporation or equal.

1.04 DESIGN

A. The minimum service pipe size shall be 6 inches in diameter. Double service lines are strictly prohibited.

B. All service connections from restaurants, commercial food preparers, or others as designated by the City for the removal of Fats, Oils, and Grease (FOG) from discharges to the City System shall be equipped with an appropriately sized grease trap with a minimum size of 1,000 gallons as specified in City specification no. 17 Special Interceptors (Grease Traps).

1.05 INSTALLATION

A. Service connections shall be properly installed at the required locations. All wyes, bends, service pipe and other appurtenances shall be provided as required for each connection. The service pipe shall be terminated at the property line or easement line unless indicated otherwise on the drawings or directed otherwise by the Utility Director or his Designee. All joints shall be installed so as to provide watertight connections.

B. All new services shall include tracing wire. Wire shall have a type THW insulated PVC copper conductor, #8 solid strand copper wire strapped to the pipe at ten-foot intervals and brought to grade at the cleanout. This branch run wire shall not be connected to the gravity sewer main tracer wire. Wire shall meet National Electric Codes and Underwriter Laboratories, Inc. requirements.

C. All active lateral connections on sanitary sewers to be replaced shall be connected to the new sanitary sewer. Contractor shall be responsible for locating lateral connections prior to construction.

D. Unless approved otherwise by the City, no gravity sewer main with sewer service laterals shall be constructed with a depth of cut greater than 18 feet.

E. On curbed streets, the exact location for each installed service shall be marked by etching or cutting as "S" in the concrete curb and painted green. Where no curb exists or is planned, locations shall be adequately marked by a method approved by the City. METHOD: 1/2-inch steel rebar, 3 inches below final grade. In addition, for new development areas where the sewer lateral is "not in use", a landscape timber (3-inch x 3-inch minimum P.T. timber, top painted green) shall be installed to mark the location of the 6-inch plug.

F. Wye joints shall be installed as directed, with the branch turned to the proper direction, or as shown on the plans. Wyes shall be firmly supported by methods and materials used for bedding of main line pipe. Branch of wyes shall be installed at an angle 45 degrees to the springline unless grade requirement dictate otherwise.

G. Bends for service lines shall be placed in the wyes where directed by the Engineer, or where necessary for proper alignment. No horizontal bends between the property line and the main line pipe are permitted.

H. When installed during sewer line construction, service pipe shall be installed to the proper line and grade from the sewer line to the property line at a grade of not less than 1/4 inch per foot. Backfilling and bedding procedures shall be as for sewer line mains as specified in Sections 7, Utility Excavation, Trenching, and Backfilling (SEWER) and Section 10, Gravity Sewers. Water tight plugs shall be placed in the end of service line stubs. Plugs shall be as recommended by the pipe manufacturer and shall be installed in accordance with the manufacturer's recommendation.

I. Yard piping shall be defined as the sewer service piping and appurtenances privately owned and located entirely on private property. All yard piping shall conform to local plumbing code and all applicable building codes. The property owner must obtain a plumbing permit prior to installing sewer services on their property. The homeowner is responsible for maintaining sewer service lines beyond the right-of-way line. The City accepts no responsibility for installation or maintenance of any service line outside the City's right-of-way line.

J. Service Connections to Existing Lines:

1. Taps will not be made prior to applicable fees being paid and a sewer connection permit being obtained from the City.

2. The main line will be tapped only when no service line stub is available. In the event the service line stub cannot be located by the City personnel,

the plumber/ contractor will be allowed to tap the line. The City will locate the service stub if, and only if, a reasonable effort has been made by the plumber/contractor. Service line shall be installed at an angle of 45° to the springline unless grade requirements dictate otherwise.

a. Ties to Existing Service Line Stubs:

(1) Connection shall be made with a watertight flexible coupling suitable for the application.
(2) Connection shall remain visible until inspection by City Inspector.
(3) Backfill shall be carefully placed and tamped around the connection as to prevent any settlement or movement.

b. Taps to Sewer Main Lines:

(1) When authorized for use, tapping saddles may be used for lateral connections to 14 inch and larger ductile iron pipe or may be utilized in the construction of a new sewer service lateral which is tapping an exiting (in-use) clay or PVC gravity sewer main. A sewer saddle shall not be used on completely new sewer system work. Tapping saddles shall be installed in accordance with manufacturer's recommendations. Under no condition shall the circular opening in the pipe wall be made with a cutting torch. Holes shall be laid out with a template at an angle of 45° to the vertical (unless grade requirements dictate otherwise) and shall be deburred and carefully beveled to provide a smooth hole shaped to conform to the fitting. Care shall be taken to prevent any foreign material from entering the cut-in pipe opening. Any material or debris that does enter the line shall be removed. Taps shall be accomplished by a cutting machine method subject to the approval of the Engineer. Should the ductile iron pipe lining be damaged during the cutting of the pipe to receive the saddle, the defective area shall be repaired.
(2) Where applicable, saddle and pipe mating surfaces shall be wiped clean and dry. Epoxy cement shall be used in cementing in accordance with the cement manufacturer's recommendations and ASTM D2855.
(3) Service line shall be connected to the saddle by means of a "Donut" as specified by the tap saddle manufacturer.
(4) City tap inspection shall be conducted after hole is cut, **BUT BEFORE CONNECTION IS MADE UP.**

(5) Any sewer main line broken or crushed during the installation of a tap shall be replaced by the plumber at no cost to the City.

(6) In the event water is entering into the ditch, the contractor/plumber shall pump the ditch as dry as necessary to make the complete connection visible at the time of inspection.

(7) Backfill shall be carefully placed and tamped around the connection so as to prevent any settlement or movement.

(8) Where multiple taps for service connections are proposed to be made to existing vitrified clay pipe (VCP) or Orangeburg pipe, the entire section of pipe between manholes shall be replaced as directed by the City with either PVC or DI pipe in order to assure no inflow/infiltration (I/I).

c. Taps to Manholes:

(1) Service line must enter manhole at angle no less than 90° to the direction of flow.

(2) Unless authorized by the Engineer in writing, or shown on the drawings, lateral connections shall be limited to 2 ties into new or existing dead end manholes.

(3) For manholes less than 12 feet in depth:

(a) Plumber/contractor shall either core drill or bust out manhole wall directly above manhole table. If slope of table is less than 2-1/2 inches per foot, the invert of service line shall enter manhole 6" above table.

(b) Service pipe shall be pushed through newly formed hole approximately 1 inch past the inside face of the manhole wall.

(c) Core hole shall be filled with non-shrink grout such as "Preco Plug," or approved equivalent, and walls shall be toweled smooth.

(d) A curved trough shall be formed on/in manhole table to direct flow into the main invert. If the service enters below the table, then table must be removed and a new trough formed.

(e) City tap inspection shall be held before backfilling commences. Work must be visible and dewatered during inspection.

(f) Backfill shall be carefully placed and tamped around the connection so as to prevent any settlement or movement and shall commence only after non-shrink grout has sufficiently hardened.

(4) For manholes greater than 12 feet in depth:

(a) Plumber/contractor shall either core drill or bust out manhole wall a minimum of four feet below ground surface. If 4 feet cannot be obtained, notify the City Engineering Department before proceeding.

(b) Service pipe shall be inserted through the manhole wall. A tee shall be placed on pipe with run vertical for clean out. Pipe shall extend to manhole table and a 45° bend shall be installed on the end to direct flow into the invert. Inside piping shall be secured to manhole wall by means of two aluminum or stainless steel straps securely anchored to manhole wall. The space between the entering pipe and the manhole opening shall be sealed with a non-shrink grout.

(c) A curved trough shall be formed on/in manhole table to direct flow into main invert. The trough shall extend beyond the opening of 45° bend to its curvature or change in direction.

(d) Cored hole shall be filled with non-shrink grout and walls shall be toweled smooth.

(e) A City tap inspection shall be held before backfilling commences. Work must be visible and dewatered.

(f) Backfill shall be carefully placed and tamped around the connection so as to prevent any settlement or movement only after non-shrink grout has sufficiently hardened.

1.06 TESTING

A. Plumber shall contact City approximately two hours before tap inspection will be needed. Tap to main lines shall remain **UNCONNECTED AND DEWATERED** until the tap has been approved by City Inspector. In the event a road or street must be cut in order to make the connection, the plumber will obtain

a road/street cut permit and have it at the job site at the time of the inspection. If the road/street cut permit is not available at this time, the tap will not be inspected.

B. During the final inspection or project acceptance inspection, the City may elect to field test the installed electronic markers utilizing City locate equipment. The contractor shall assist in the field locate services required to complete this test.

END OF SECTION

SECTION 11
FORCE MAIN

1.01 SCOPE

A. This should be used only after the installation of a gravity system has been exhausted. This section includes the general requirements for design and installation of force main systems serving sanitary sewage pumping stations. The relevant provisions of other sections of this specification shall be applicable to this section unless otherwise indicated herein or approved by the City. The Contractor shall provide all work necessary for the construction and testing of a force main system. This work shall include the installation of all force main lines, fittings, and appurtenances as may be required to complete the work as indicated in the plans and as specified herein. The work shall also include such connections, reconnections, temporary service, and all other provisions in regard to existing sewer operations and modifications as is required to perform the new work. All references to Industry Standards (ASTM, ANSI, AWWA, etc.) shall be to the latest revision unless otherwise stated. Only those materials included in the City of Tavares Construction Specifications Manual shall be installed. All materials shall be new unless specifically called for otherwise.

1.02 GENERAL

A. Submittals:

All submittals shall be submitted in accordance with the shop drawing submittal requirements as specified in Section 1, General Provisions.

1. Shop Drawings: The Contractor shall submit catalog cut sheets, manufacturer's descriptive literature, and other necessary information to the Engineer for approval before installation.
2. Certifications: The Contractor shall submit a certification from the pipe manufacturer that the pipe and fittings supplied are new, have been manufactured for this project, and have been inspected at the plant.

1.03 MATERIALS

A. The materials of construction shall comply with the specific applicable standards set forth under Section 2, "Utility Excavation, Trenching and Backfilling", Section 3, "Boring and Jacking", and Section 4, "Pipe, Fittings, Valves and Appurtenances". All material shall be free from defects impairing strength and durability, shall be of the best commercial quality for the purpose specified, and shall have structural properties sufficient to safely sustain or withstand strains and stresses to which it is normally subjected and be true to detail.

B. Pipe material for Force Mains shall be as shown on the contract drawing. Pipe material shall be in accordance with the design requirements in this specification section and specification Section 19, Water Pipe, Fittings, Valves, and Appurtenances, unless otherwise shown on the contract drawings. Pipe, fittings, valves, restrainers, and other appurtenances shall be as specified in Section 19, Water Pipe, Fittings, Valves, and Appurtenances. Additional valves and appurtenances are specified below. In order to preclude possible domestic water tapping, all installed underground nonmetallic sanitary sewage force mains shall be green or ductile iron pipe marked with a continuous green stripe located within the top 90 degrees of the pipe.

1. Nonmetallic Marking Tape: Marking tape shall be "Extra-Stretch" marking tape equal to Allen Marking Tape, Allen Systems; Terra Tape, Division Reef Industries, for sanitary sewer, colored green. Extra-Stretch marking tape shall consist of 6-ply copolymer film bonded together without the use of adhesives, specifically formulated for prolonged use underground. It shall be highly resistant to alkalis, acids, and other destructive agents found in the soil. Extra Stretch tape shall have a minimum thickness of 6 mils, minimum tensile strength of 80 lb per 3-inch-wide strip, and a minimum elongation of 600%. Tape shall bear a continuous printed message repeated every 16 to 36 inches warning of the installation buried below. Installation instructions for the tape shall be printed with each message along the entire length.
2. Tracer wire shall have a green, type TWH insulated PVC copper conductor, #8 solid strand copper wire that is strapped to the pipe at ten-foot intervals installed. Wire shall meet National Electric Codes and Underwriter Laboratories, Inc. requirements.
3. Air release valves shall be A.R.I Model S-020 or equal, with 316 stainless steel service saddle, 316 stainless steel piping, and 316 stainless steel ball valve.
4. Combination air valves shall be A.R.I Model D-020 or D-025, or equal, with 316 stainless steel service saddle, 316 stainless steel piping, and 316 stainless steel ball valve.
5. Piping Supports: The Contractor shall furnish and install all supports necessary to hold the piping and appurtenances in a firm, substantial manner at the lines and grades indicated on the drawings or as specified. Piping within pumping stations shall be adequately supported from floors, walls, ceilings or beams. Supports from the floor shall be by approved saddle stands or suitable concrete piers as indicated or approved.

    a. Pipe saddles shall be shaped to fit the pipe with which they will be used and shall be capable of screw adjustment. Concrete piers shall conform accurately to the bottom one-third to one-half of the pipe. Piping along walls shall be supported by approved wall brackets with attached pipe rolls or saddles or by wall brackets with

adjustable hanger rods. For piping supported from the ceiling, approved rod hangers of a type capable of screw adjustment after erection of the piping and with suitable adjustable concrete inserts or beam clamps shall be used. If required, piping supports shall be placed so as to provide a uniform slope in the pipe without sagging. Supports shall be located wherever necessary, and in no case shall they exceed 4 feet on centers for PVC pipe or manufacturer's recommendations for DIP pipe.

1.04 DESIGN

The Developer shall comply with the applicable criteria set forth in WEF Manual of Practice No. 9, Latest Edition, Recommended Standards for Wastewater Facilities, Latest Edition, and the Department of Environmental Protection requirements. Additionally, ASCE publication Pipeline Design for Water and Wastewater may be used as a design guide, if not in conflict with other requirements.

A. System Design:

1. Force Main systems shall be of adequate size to efficiently transmit the total ultimate peak operational flows, applied by the connected sewage pumping station(s) to the effluent point. Consideration shall be given to possible future connection of other gravity sewer, pump stations and force mains, and this probability shall be reviewed with the City. Capacity computations shall be coordinated with the proposed pumping system(s), along with any future flow requirements, if applicable in order to provide adequate pipeline cleansing. Force main flow velocity shall not be less than 2 feet per second at ultimate design minimum pumping capacity, however, with multiple pumping station systems or phase development, this requirement may be difficult to meet and the system design shall receive special attention regarding cleaning, maintenance, pumping rates, future upgrading of systems by changing impellers, pump changes, parallel force mains and other ways to increase future capability. Minimum force main diameter shall be 4 inches.
2. Operational Cost Considerations: In addition to initial capital expenditure, long term pumping station operational costs shall also receive consideration when sizing force main systems or making decisions concerning whether gravity service or lift station service is to be provided.
3. Pipe for force main lines in sizes up to and including 48 inches shall be ductile iron, polyvinyl chloride (PVC), or high density polyethylene (HDPE), as shown on the drawings and as herein specified. Pipe for force main lines larger than 48 inches shall be ductile iron as shown on the drawings and herein specified. Pipe with diameters of 4 to 10 inches for sewer force mains shall have a minimum dimension ration (DR) of 25,

Class 100. Pipe with diameters of 12 inches and larger for sewer force mains shall have a minimum DR of 26, Class 165. Pipe of any diameter buried at 10 feet or more for any part of the pipe shall have a minimum DR of 26. Pipe to be installed underground shall be push-on joint or mechanical joint type. Pipe installed on bridges, piles or other above ground installations shall be push-on restrained joint utilizing fast-grip gaskets (American Pipe), Field-Lok gaskets (U.S. Pipe), restrained mechanical joint ductile iron pipe or flanged ductile iron pipe as described in these specifications (Bell and rod restraints shall not be used unless approved otherwise by the City). PVC or HDPE piping shall not be utilized on bridges or other above ground applications. Pipe sizes and applications shall conform to the following chart.

PIPE	PIPE SIZE	JOINT TYPE	APPLICATION
Ductile Iron	4 inches and larger	Mechanical joint, push-on joint, flanged joint, ball joint, etc.	Any
PVC DR 25 or 26	4 inches and larger	Push-on joint	below ground
PVC (Sch. 40)	3 inches and smaller	Solvent Weld	below ground
PVC (Sch. 80)	3 inches and smaller	Solvent Weld	below ground
Polyethylene (HDPE)	2 inches and larger	Fused	below ground

4. Thrust blocking or restraint joints shall be provided at all changes in alignment.
5. The use of surge valves, surge tanks or other suitable means to protect the force main against severe pressure changes shall be evaluated.
6. An automatic air relief valve shall be placed at high points in the force main sewer to prevent air locking.
7. Force mains tying into manholes shall enter the manhole at or below the flow line of the receiving manhole, and at an angle of not less than 120 degrees, measured from the centerline of downstream (outlet) pipe.

1.05 INSTALLATION

A. The general installation procedures shall comply with the specific applicable standards set forth under Section 2, "Utility Excavation, Trenching and Backfilling", Section 3, "Boring and Jacking", and Section 4, "Pipe, Fittings, Valves and Appurtenances".

B. General: The Contractor shall install all pipework meeting the requirements of AWWA for installation various types and classes of pipe. It is the Contractor's responsibility to, coordinate utility locates with Sunshine State One-Call of Florida, Inc. (#800/432-4770 or web site www.callsunshine.com), make

exploratory excavations, and/or use other methods available to locate existing utilities prior to construction of any gravity sewers. If necessary, the Contractor shall adjust the new force mains, subject to approval by the Engineer, to avoid conflicts with existing piping. If a conflict is found between an existing utility and proposed grade, the Contractor is to furnish the Engineer of Record all pertinent information so that remedial design can be performed.

C. Reference Points and Layout: The Contractor shall be responsible for setting all grade lines, centerline of construction, and locating property lines. The City will provide a bench mark. Any reference points, points of intersection, property corners, or bench marks, which are disturbed during construction, shall be restored by a Land Surveyor registered to practice in the State of Florida, and all costs thereof shall be borne by the Contractor. The Contractor shall assume all responsibility for the correctness of the grade and alignment stakes.

D. Pipe Handling: Every care shall be taken in handling and laying pipe and fittings to avoid damaging the pipe, scratching or marring machined surfaces, and abrasion of the pipe coating. The lined Pipe and Fittings must be handled only from the outside of the pipe and fittings. No forks, chains, straps, hooks, etc. shall be placed inside the pipe and fittings for lifting, positioning, or laying. Carry pipe into position - do not drag. Do not dump or drop any of the materials of this section into the trench. Lower pipe and accessories into trench by means of ropes, belt slings, or other equipment approved by the Engineer. Thoroughly clean interior of pipe and accessories before lowering pipe into trench. Keep clean during laying operations by plugging or other methods approved by the Engineer. Before installation, inspect each piece of pipe and fitting for defects. Material found to be defective before or after laying shall be replaced with sound material meeting the specified requirements, and without additional cost to the City. If damaged, the material shall be repaired in accordance with the liner manufacturer's recommendations. Any fitting showing a crack and any fitting or pipe which has received a severe blow that may have caused an incipient fracture, even though no such fracture can be seen, shall be marked as rejected and removed at once from the work. In any pipe showing a distinct crack in which it is believed there is no incipient fracture beyond the limits of the visible crack, the cracked portion, if so approved by the City, may be cut off before the pipe is laid so that the pipe used may be perfectly sound. The cut shall be made in the sound barrel at a point at least 12 inches from the visible limits of the crack. Except as otherwise approved, all cutting shall be done with a power driven cut off saw. All cut ends shall be examined for possible cracks caused by cutting. Keep gaskets away from oil, grease, excessive heat and direct rays of the sun. Keep PVC pipe covered during storage to prevent damage by sunlight.

E. Pipe Installation: Pipe shall be installed in accordance with AWWA C-600, latest revision, for ductile iron force main; ASTM D-2321, latest revision, for PVC

force main; manufacturer's instruction and Engineer direction. Underground pipe shall be furnished in nominal 18- or 20-foot laying lengths unless indicated otherwise on the drawings. Pipe shall be cut to length as required to fit installation conditions.

1. Rest the full length of each section of pipe solidly on the pipe bed, with recesses excavated to accommodate bells, couplings and joints.

2. Take up and relay pipe that has the grade or joint disturbed after laying.

3. Special Construction Requirements for 24 Inch and Larger PVC Pipe: For PVC pipe 24 inches and larger, unless approved otherwise by the City, a foundation bed of granular material (57 stone) shall be placed under and around all ductile iron fittings and valves for additional support of heavy system components. A foundation bed of granular material shall be provided for all valves 20-inch size and larger. For granular materials, the minimum vertical limit is 12 inches under the fitting or valve, up to 1/3 the overall height of the fitting or valve. The minimum horizontal limits of the granular material shall be 12 inches in all directions beyond the outer edges of the fitting or valve. The compaction of soils below the granular material shall be at 98% of the maximum density. All spool pieces between 24 inches and larger ductile fittings and valves shall be at least 5 feet long. Where possible, a full joint of pipe (no short pipe lengths) shall be connected to all fittings and valves. No joint deflection shall be allowed at the fittings or valves.

4. Pipe Depth: The standard minimum cover for sewage force main systems shall be 36 inches from the top of the pipe to finish grade. The maximum allowable depth of cover for sewage force main shall be 84 inches. Where these conditions cannot be met, special consideration will be given. Additional depth may be required where future surface improvements are planned or anticipated.

5. Horizontal and Vertical Separation

    a. The horizontal separation between sanitary force mains and existing or proposed water mains shall not be less than 10 feet, or as specified by FDEP. The elevation of the top of the sewer pipe shall be at least 18 inches below the invert of the water main.
    b. Wherever new sanitary force mains must cross under water mains, the sewer shall be laid at such an elevation that the top of the sewer pipe is at least 18 inches below the bottom of the water main. When the elevation of the sanitary force main cannot be buried to meet the above requirements, special protection shall be provided or the water main shall be relocated to provide this separation and

reconstructed with ductile iron pipe for a distance of 10 feet on each side of the sewer with one full length of water main pipe centered over the sewer so that both joints are as far from the sewer as possible. Said protection shall consist of completely encasing, 6 inches minimum, the sewer pipe in concrete for a minimum distance of 10 feet each side of the water main, or installation of pressure-tight joint cast or ductile iron pipe for the same dimension.

6. Joints: The Contractor shall submit the specific type of joint to be used on all pipe, including complete data on all material to be used, to the Engineer for approval before beginning any pipework. Make all joints conform to the requirements of the manufacturer's printed instructions as approved for the type of joint installed.

   a. Underground pipe shall be installed using push on joints or mechanical joints as shown on the plans. All adapters necessary for the proper jointing of pipe shall be provided. Connections to other types of pipe shall be made with a Dresser restrained joint coupling or approved equal or watertight coupling suitable for application.
   b. PVC Joints shall form a watertight and airtight seal.

F. <u>Tracer Wire and Warning Tape Installation</u>:

1. General: Wherever non metallic pipe is installed, No. 8 tracer wire and warning tape shall be installed to facilitate future location of the force main.
2. Tracer wires shall begin and terminate in the test boxes. Wire shall run continuously through test stations for the entire length of the pipe line and shall be strapped to the pipe at ten-foot intervals Test boxes shall be installed at each location as shown on the plans, spaced at intervals not exceeding 500 feet. Test boxes shall not be installed in streets or driveways. Tracer wire between boxes shall be continuous, unbroken lengths. The tracer wire shall not be installed in tension, but neither shall there be "coils" in the wire. The ends of the tracer wires shall be installed in the test boxes. The length of each tracer wire in each box shall be long enough to extend no less than one foot and no greater than 2 feet above ground level. Breaks shall be repaired by splicing with a split-bolt clamp or pre approved equal. Repairs by "twisting" the two ends together will not be accepted.
3. Warning tape shall be buried in the backfill approximately 1 foot over the top of the PVC force main. Tape shall be laid in continuous lengths. Any breaks or tears shall be repaired before proceeding with the backfilling operations.

4. For pipe installed via Horizontal Directional Drill, see SECTION 18 - HORIZONTAL DIRECTIONAL DRILLING, for tracer wire requirements.

G. Sewer Air Release Valve or Combination Sewer Valve:

1. General: Where the force main profile is such that air pockets or entrapment could occur resulting in flow blockage, provisions for automatic air release and/or venting shall be provided. Where free flow will occur during operation or after pumping stops, combined air release and vacuum valve assemblies shall be provided. Construction shall provide for minimum contact between operating mechanisms and sewage.
2. Install gravel drainage bed and dog house manhole as specified in the City of Tavares Standard Details. Manhole shall be installed with wall section plumb and level and in accordance to Section 10, Gravity Sewers.

H. Thrust Restraint: All non-flanged fittings and valves shall be restrained. In addition, thrust blocking or restraint joints shall be provided at all changes in alignment. Restrained joints shall be of the type specified in Section 19, Water Pipe, Fittings, Valves, and Appurtenances. The use of thrust blocks shall be limited to situations such as point repair where exposing several joints of pipe is not feasible due to existing ground conditions and also must be used with mechanical restraining devices in the judgment of the Engineer. Locate thrust blocking between solid ground and the fitting to be anchored. Unless otherwise shown or directed by the Engineer, place the base and thrust bearing sides of thrust blocking directly against undisturbed earth. Place thrust blocking so the fitting joints will be accessible for repair.

I. System Connections: All connections and ties to the City Sewer System and transfer of services will be performed by the contractor under supervision of a City representative.

J. Valves and Valve Locations: Valves shall be installed on all subsidiary force mains at the point of connection to the major main and where force mains are to be extended and at intervals not exceeding 1,000 feet. At future connection branches or ends, the valves shall be restrained by methods to facilitate said connection without system shut down. All valves on force mains shall be plug type valves only.

K. Tapping Sleeve and Valve Connections: Unless approved otherwise by the City, tapped connections in the barrel of a pipe shall be less than the diameter of pipe being tapped except 4-inch pipe which may be tapped with a 4-inch tapping sleeve and valve. No taps shall be made within 5 feet of a joint.

L. Branch Connections: Branch connections are not allowable. All force mains must terminate at manholes, wet wells, or force mains. Force mains shall not terminate into gravity sewers.

M. Terminal Discharge: Force mains shall enter the terminal facility (gravity sewer manhole, pumping station wet well, or other) at a point equal to the operational water level of said receiving unit. Should an elevation drop be required to obtain the outlet connection, the prior down-slope of the force main shall not exceed 45 degrees, and adequate air venting shall be provided at the profile breakpoint.

N. Force Main Connection to Existing Manhole: Where a new force main is connected into an existing manhole the manhole shall be properly prepared to receive the new force main and repaired or replaced as indicated or specified. Manhole inverts shall be reshaped as required by the new connection to provide a smooth flowing channel of the exact shape of the sewer to which it connects. An approved gate valve or plug valve must be installed immediately prior to the 45º bends going into the manhole. Force mains tying into manholes shall enter the manhole at or below the flow line of the receiving manhole, and at an angle of not less than 120 degrees, measured from the centerline of downstream (outlet) pipe.

O. Clean Out Connections: Should force mains appear to be susceptible to sedimentation clogging, as created by depressed crossings or extended low flow (velocity) periods, suitable clean out connections shall be provided in accordance with the City of Tavares Standard details.

P. Identification: In order to preclude possible domestic water tapping, all installed underground nonmetallic sanitary sewage force mains shall be green or ductile iron pipe marked with a continuous green stripe located within the top 90 degrees of the pipe.

1.06 TESTING

A. HDPE pipe testing procedures shall be as specified in Section 19, Water Pipe, Fittings, Valves, and Appurtenances. The Contractor shall perform leakage and pressure testing of all other (non-HDPE pipe) sanitary sewage force mains, as set forth in the following, and shall conduct said tests in the presence of representatives from the City and/or other authorized agencies with 48 hours' advance notice provided.

B. Piping and appurtenances to be tested shall be within sections between valves or adequate plugs, not exceeding 2,000 feet with prior approval from the City. Testing shall not proceed until restraining devices are installed. All piping shall be thoroughly cleaned and flushed prior to testing to clear the lines of all foreign matter. While the piping is being filled with water, care shall be exercised to

permit the escape of air from extremities of the test section, with additional release cocks provided if required.

C. Leakage and pressure testing shall be performed simultaneously at 100 psi for all sizes of force mains. The testing procedure shall continue for an uninterrupted period of not less than 2 hours by way of a pump taking supply from a container suitable for measuring water loss. The amount of loss shall be determined by measuring the volume displaced from said container. No pipe will be accepted if pressure loss is greater than 5 psi regardless of the leakage test results. Testing shall be in accordance with the applicable AWWA provisions for PVC-AWWA Publication M-23 and for DIP-AWWA Standard C600, Section 4. The allowable rate of leakage shall be less than the number of gallons per hour determined by the following formulas:

PVC Pipe
$L = ND\ p^{1/2} = 7400$
For 100 psi; test: L = 0.00135 ND (PVC)

DIP Pipe
$L = SDp^{1/2} = 133{,}200$
For 100 psi; test: L = 0.000075 SD (DIP)

Where:
L = allowable leakage in gallons per hour
N = number of joints in section tested
S = length of pipe tested, in feet
D = nominal diameter of the pipe in inches
P = average test pressure maintained during the leakage test in pounds per square inch gauge.

D. Should the test fail, necessary repairs shall be accomplished by the contractor and the test repeated until within the established limits. The contractor shall furnish the necessary labor, water, pumps, gauges, and all other items required to conduct the required sanitary sewage force main testing and shall perform the necessary system repairs required to comply with the specified pressure and leakage testing.

E. During the pressure and leakage testing, all exposed pipe, fittings, valves and joints shall be examined carefully during the test. Any damaged or defective pipe, fittings or valves that are discovered following the pressure test shall be repaired or replaced with sound material and the test shall be repeated until it is satisfactory. For new installations, the contractor shall be limited to the number of repair couplings utilized to repair pipe joint leaks. Unless approved otherwise by the City, the contractor is limited to two repair couplings per 1,000 linear feet installed pipe. Should the actual number of joint leaks exceed the above limit, then the City may require the contractor to remove and re-install the entire

associated main or certain sections of the main at the contractor's expense. For new work "bell joint leak clamps" or similar devices are not acceptable for the repair of leaks at the joint.

F. All tapping saddle/valve assemblies shall be subject to a 1-hour pressure test at 125 psi with no allowable leakage, prior to making tap.

G. Tracing Wire Testing: After construction and backfilling is complete, but before final inspection, the City inspector will test the tracer wire with standard City locating equipment. If the inspector determines that the tracer is not operating properly, the Contractor shall locate and correct the problem. The force main will not be accepted and placed in operation until the tracer system is acceptable to the City.

END OF SECTION

SECTION 12
SEWERAGE PUMPING STATION

1.01 SCOPE

A. This section includes the general requirements for the design criteria and installation of sewage pumping stations including all labor, materials, tools, equipment and performance of all work necessary or incidental to furnish an operable pump station as shown on the plans and specified herein. The relevant provisions included in these specifications shall be applicable to this section, unless otherwise indicated herein or approved by the City. A Sanitary Sewer Lift Station Design Data sheet shall be submitted with all lift station design proposals. All references to Industry Standards (ASTM, ANSI, etc.) shall be to the latest revision unless otherwise stated. Only those materials included in the City of Tavares Construction Specifications Manual, (including, but not limited to, submersible pumps, VFD equipment and control panels), shall be installed. All materials shall be new unless specifically called for otherwise. All structures, pumps and panels shall require a complete shop drawing submittal, as detailed in this specification for the City's review and approval. All precast concrete duplex and triplex lift station shall conform to the respective City of Tavares Standard Detail. Any private pumping station that connects to the City's sewer system that has any pump over 3 Hp shall conform to the City standards and shall be reviewed by the City.

B. <u>Private Sanitary Sewer Lift Station Requirements.</u> Privately owned collection systems connected to the City's system shall comply with the following.

1. Discharger of private wastewater collection system must provide a copy of the contract with a reputable person or firm experienced in the operations, maintenance, and repairs of lift stations to the City. The Lift Station Maintenance Contractor must have access to equipment needed to pull and service pumps as well as pumping and hauling lift station waste. The contractor must be able to have a 24-hour/7-days-a-week response time and be able to respond to the site within 2 hours after notification of spill or overflow.

2. The Lift Station Maintenance Contractor shall provide 24-hour emergency telephone numbers for themselves and the property owner, enabling the City to notify the property owner and contractor of a reported emergency.

3. Upon expiration or change of status of the contractor, the City of Tavares Wastewater Department shall be notified in writing within 72 hours.

4. A sign shall be posted on or adjacent to the lift station site (preferably on the control panel). The sign size should be approximately 24- x 30-inch, white background with red letters. The letters should be of a size legible from a distance of 30 feet. The sign shall state the following:

   a. Private Sanitary Sewer Lift Station.
   b. In case of Emergency call (phone number).
   c. Owner or Business Name and phone number.
   d. Contractors name and phone number.

5. The City shall have the right to inspect all private wastewater collection systems and appurtenances, and to cause discontinuance of sewer service if the private wastewater collection system is not maintained in a sanitary and effective operating condition or if the public sewer facilities may be harmed thereby

6. Report spills immediately to FDEP, and provide spill response contact information if differing from contact information provided.

1.02 MATERIALS AND EQUIPMENT

All material shall be free from defects impairing strength and durability and be of the best commercial quality for the purpose specified. Unless indicated otherwise on the drawings, all metal components in the wet well, with the exception of pumps and motors shall be anodized aluminum or 316 stainless steel as specified herein or on the plans. The pumps, motors and guide rail system shall be supplied by the pump supplier to ensure unit compatibility. Major items of equipment shall include wet well, valve vault, non-clog submersible pumps, pump discharge piping and fittings and valves and gauges inside the wetwell and valve vault, access hatches, pump support brackets, pump guide rails, coatings, wet well liner, floats, backflow prevention.

A. Precast Concrete Wet Well shall consist of one monolithically cast base section and a 12-inch long (at a minimum) base slab extension for counter flotation. The wet well floor shall have stainless steel anchor bolts for mounting of pump bases. Wet well bases, sections and miscellaneous structures shall conform to the requirements of ASTM C478 (specification for precast concrete manhole sections and structures) except as modified herein. Cement shall meet the requirements of ASTM C150 (specification for Portland cement, type II). Wall thickness shall be as specified on the contract drawings and in accordance the City of Tavares Standard Details. If no wall thickness is specified, then the minimum wall thickness shall be 1/12 the inside diameter in inches plus 1 inch. Rings shall be custom-made with openings to meet indicated pipe alignment conditions and

invert elevations. Both top slab and bottom slab shall be 12 inches thick (at a minimum). For concrete base and risers, the reinforcing steel shall be designed, signed and sealed by a Florida Registered Structural Engineer and shall be submitted with the shop drawings. All openings in wet well sections shall be cast-in with the exception of the influent pipe opening which shall be cored in the wall. Joint contact surfaces shall be formed with machined castings and shall be exactly parallel and specifically designed by a professional engineer. Wet well diameter and height shall be as shown on the contract drawings and in accordance with the City of Tavares Standard Details. The wetwell shall be HDPE lined with an Agru Sure Grip Liner, Green Monster Liner or approved equal, with a minimum thickness of 2 mm, mechanically anchored to the concrete and with all joints extrusion welded by certified welders. The Contractor shall submit shop drawings consisting of manufacturer's standard details of various sections, for approval, before placing order for structures.

1. Joints: Joints shall "RAM-NEK" sealing compound, conforming to Federal Specification SS S-00210 as manufactured by the Henry Company, El Segundo, CA or approved equal. Cement mortar joints will not be acceptable, except that each joint shall be wiped inside the manhole with cement mortar after assembly. Joints shall be water tight.

B. Fiberglass Wet Well – (ALTERNATE WET WELL CONSTRUCTION): Unless noted otherwise by the City, the contractor may construct a fiberglass wet well in lieu of a precast concrete wet well. The fiberglass wet well shall be designed (signed and sealed) by a Florida Professional Engineer. The design shall include the operating conditions as noted on the drawings, a 24-inch (minimum) thick (12 inches thick inside the wet well and 12 inches thick outside the wet well) reinforced concrete hold-down base which extends 24 inches beyond the outside of the wet well, a 6-inch (minimum) thick reinforced concrete top slab, pump access frame and cover and other standard wet well features as shown on the drawings. Pumps shall be anchored to a 1-inch-thick steel plate. The complete design (designed by a Florida Professional Engineer) must be submitted in the form of a shop drawing for the City's review and approval. Fiberglass reinforced polyester wet wells shall be manufactured from commercial grade unsaturated polyester resin with fiberglass reinforcements. Unless approved otherwise by the City, the wet well shall be a one-piece unit.

1. Reinforcing Material: The reinforcing materials shall be a commercial Grade "E" type glass in the form of mat, continuous roving, chopped roving, roving fabric, or a combination of the above, having a coupling agent that will provide a suitable bond between the glass reinforcements and the resin.

2. Surfacing Materials: If reinforcing materials are used on the surface exposed to the contained substance, it shall be a commercial grade chemical-resistant glass that will provide a suitable bond with the resin and leave a resin rich surface.

3. Fillers and Additives: Fillers, when used, shall be inert to the environment and wet well construction. Additives, such as thixotropic agents, catalysts, promoters, etc., may be added as required by the specific manufacturing process to be used. The resulting reinforced plastic material must meet the requirement of this specification.

4. Exterior Surface: The exterior surface shall be relatively smooth with no sharp projections. Hand-work finish is acceptable if enough resin is present to eliminate fiber show. The exterior surface shall be free of blisters larger than 1/2 inch in diameter, delamination and fiber show.

5. Interior Surface: The interior surface shall be resin rich with no exposed fibers. The surface shall be free of crazing, delamination, blisters larger than 1/2 inch in diameter, and wrinkles of 1/8 inch or greater in depth. Surface pits shall be permitted if they are less that 3/4 inch in diameter and less than 1/16 inch deep.

6. Defects Not Permitted:

   a. Exposed fibers: glass fibers not wet out with resin.
   b. Resin runs: runs of resin and sand on the surface.
   c. Dry areas: areas with glass not wet out with resin.
   d. Delamination: separation in the laminate.
   e. Blisters: light colored areas larger than ½ inch in diameter.
   f. Crazing: cracks caused by sharp objects.
   g. Pits or Voids: air pockets.
   h. Wrinkles: smooth irregularities in the surface.
   i. Sharp Projection: fiber or resin projections necessitating gloves for handling.

7. Installation of Brackets: Manufacturer or manufacturer certified field personnel shall glass in all stainless steel fasteners and brackets, discharge piping brackets, etc. Manufacturer of wet well shall be responsible for integrity of all field glassing.

8. Marking and Identification: Each wet well shall be marked with the following information:

   a. Manufacturer's name or trademark
   b. Manufacturing special number
   c. Total length and nominal diameter

9. Load Rating: The complete wet well shall have a minimum dynamic-load rating of 16,000 ft-lbs when tested in accordance with ASTM 3753, Section 8, test methods D 790 and D 695. To establish this rating the complete wet well shall not leak, crack, or suffer other damage when load tested to 40,000 ft-lbs and shall not deflect vertically downward more than 1/4 inch at the point of load application when loaded to 24,000 lbs.

10. Stiffness: The wet well cylinder shall have a minimum pipe-stiffness value as shown in Table 1 (at a minimum) when tested in accordance with ASTM D3757, Section 8.

Table 1: Stiffness Requirements (Minimum)	
Length, Ft.	F/AY psi
10 to 20	2.01
21 to 30	3.02
31 to 40	5.24

C. The valve pit shall consist of a concrete structure sized to adequately house the equipment and allow room for removal of equipment and regular maintenance as shown on the contract drawings in accordance to the City of Tavares Standard Details. All pipe wall penetrations shall be through cast-in or cored holes with flexible rubber sealing connections.

D. Concrete cement shall be Type II, having a maximum Tri-calcium aluminate (3CaOAL203) content of 8%. Coarse aggregate shall be sound, crushed, angular granitic stone only. Smooth or rounded stone is not acceptable. Fine aggregate and coarse aggregate shall meet the requirements of ASTM C33. Calcium Chloride or admixtures containing Calcium Chloride shall not be used in the concrete mix.

E. Reinforcing shall meet or exceed the minimums described in ASTM C478.

F. Flexible Pipe-Connectors: Watertight connections between all pipe and wet well shall be achieved with neoprene-EPDM flexible pipe connectors. The Neoprene-EPDM material the connector is manufactured from shall conform to ASTM C443 and shall be a minimum of 3/8-inch (9.4 mm) thick or greater. The material

shall be resistant to ozone, weathering, aging, and chemicals, including acids, alkalis, animal and vegetable fats, oils and petroleum products.

G. Submersible Non-Clog Sewage Pumps: The pumps shall be designed to pump raw sewage wastewater, sludge and other fibrous materials without injurious damage during operation and conform to the requirements of the National Electrical Code. The design shall be such that the lifting cover, stator housing and volute casing are of ASTM A48, Class 25 gray iron construction, with all nuts, bolts, washers and other fastening devices coming into contact with the sewage constructed of 316 stainless steel. All mating surfaces (pump assembly), of major components shall be machined and fitted with o-rings where watertight sealing is required. All rotating parts shall be accurately machined and shall be in as nearly perfect rotational balance as possible. Excessive vibration shall be sufficient cause for rejection of the equipment. The pump impellers shall be re-balanced after being trimmed. Pumps shall be Hydromatic submersible pumps.

.

1. Pump Performance and Sizing: Each pump shall have the necessary characteristics and be properly selected to perform under the operating characteristics shown on the attached "Pump Data Sheets".
2. Seals: Pumps shall have mechanical seals, which shall require neither maintenance nor adjustment and shall be readily accessible for inspection and replacement. The seals shall not rely upon the pumped media for lubrication and shall not be damaged if the pump is run un-submerged for extended periods while pumping under load. Mechanical seals shall be solid hard faced, (not laminated type). The top and bottom seal shall be carbon-ceramic faced, tungsten carbide, or silicon carbide material. A double electrode shall be mounted in the seal chamber to detect any water entering the chamber through the lower seal. Water in the chamber shall cause a red light to turn on at the control box. This signal shall not stop motor but shall act as a warning only, indicating service is required. One spare upper and lower seal each shall be provided for each pump by the manufacturer.
3. Impeller shall be cast iron and of the non-clog enclosed type. The impeller casing shall have well-rounded water passages and smooth interior surfaces free from cracks, porosity, blowholes, or other irregularities. The impeller shall be a single or double vane of hard alloy gray iron construction, dynamically balanced, double shrouded, with a smooth long thoroughfare and having no acute angles, with not more than two non-clog passages and capable of passing a minimum 3" solids. Screw impellers are not acceptable. A stainless steel rotating wear ring shall be installed on the impeller with a bronze stationary volute wear ring of, to provide efficient sealing between the volute and impeller. Impeller is to be driven by stainless steel shaft key and impeller is held in place

with stainless steel lock screw and washer. Impeller and motor shall lift off of case as a unit without disturbing piping.

4. Motors: The pump shall be driven by a totally submersible electric motor. Pump motor shall be of sufficient horsepower as to be non-overloading over the entire length of the pump curve. The stator housing shall be a watertight casing. Motor insulation shall be moisture resistant, Class F, 155ºC at a minimum. Motor shall be NEMA Design B. Motor shall be designed to operate in a totally, partially or non-submerged condition without damage to the motor. Motors shall not contain any insulating fluid consisting of material classified as hazardous waste by the EPA such as tetrachloroethylene or PCB. Motors shall be provided with thermal sensors in the motor windings designed such that the pump will automatically shut off and set off an alarm condition on high temperature condition.

5. Power Cords and Control Cords: Sufficient cord shall be provided to suit the arrangement shown on the plans, minimum 25 feet of each cord. Cords shall be STW-A, water resistant 600V, 60ºC, UL and CSA approved and applied dependent on amp draw for size, or approved alternative. Cords shall be attached to the pump per manufacturer's recommendations to protect against leakage. Both control and power cords shall have a green carrier ground conductor that attaches to motor frame. Power cords and control cords shall junction at a box mounted outside the well, but not inside the control panel. Cords shall be connected in a manner to allow removal of pumps for maintenance.

6. Discharge Base Elbow: The pump manufacturer shall furnish a discharge base and discharge elbow for the pump supplied. The base shall be sufficiently rigid to firmly support the guide rails, discharge piping and pump under all operating conditions. The base shall be suitable for bolting to the floor, (bolting to a standard 1-inch thick metal plate, see details on drawings), of the wet well. The face of the discharge elbow inlet flange shall make contact with the face of the pump discharge nozzle flange. The pump and motor assembly shall be a "quick disconnect" type connected to and supported by the discharge base and guide rails allowing the pump to be removed from the wet well and replaced without the need for unbolting any flange, lowering the liquid level or requiring operating personnel to enter the wet well. Pump shall be provided with a sealing flange and guide rail sliding bracket. The bracket shall be designed to obtain a leak proof seal between flange faces as final alignment of the pump occurs in the connected position. The bracket shall maintain proper contact and a suitably sealed connection between flange faces under all operating conditions. Metal to metal mating surfaces are acceptable, if machined finished.

7. Exterior of pump shall be coated with manufacturer's standard finish (powder coated epoxy finish is preferred, not required.

8. The pump supplier shall provide a vinyl or aluminum placard or tag which indicates all operating conditions of the pumps, including name plate data, impeller size and part number, design flow, TDH, and other pump related data.

9. Pump Test: A written report of pump tests shall be provided with each pump prior to shipment. The required manufacturer testing is detailed below in the testing section of this specification. The manufacturer shall furnish the Engineer of Record with three copies of certified performance curves for each pump.

H. Pipe, Fittings, Pressure Gauges, and Valves: All external piping shall be ductile iron pressure class 350 (flanged joint for exposed pipe and mechanical joint for buried pipe) and all internal wet well piping from the pump discharge elbow to the valve box shall be a minimum of SDR-11 HDPE. All piping, fittings, valves and appurtenances shall meet the specifications in Section 19 - WATER PIPE, FITTINGS, VALVES, AND APPURTENANCES. Pipe supports shall be provided as needed. Pressure gauges shall be stainless steel with stainless steel diaphragm, liquid filled, 4-inch-diameter dial with 0- to 100-psi range. Gauges shall be as manufactured by WKA, lower mount, Type 233.30 and diaphragms shall be as manufactured by Hyett, Model 43MCR-01 or approved equal.

I. Access Covers shall have clear opening of 36- x 84-inch access as manufactured by Halliday products or approved equal. Access frame and cover shall have a 1/4-inch-thick, one-piece, mill finish, extruded aluminum frame, incorporating a continuous concrete anchor. Door panel(s) shall be 1/4-inch-thick aluminum diamond plate, reinforced to withstand a live load of 300 psi. Door(s) shall open to 90 degrees and automatically lock with stainless steel hold open arms with aluminum release handles. Door(s) shall close flush with the frame. Unit shall lock with a noncorrosive locking bar. All access frame, cover, hardware and fasteners shall be constructed of 316 stainless steel. All surfaces in contact with concrete shall have a shop coat of zinc chromatic primer, approved alkali resistant paint or approved protective coating. Double door access covers shall have removable center bar support. Cover must be compatible with enclosed equipment. Padlocks for access covers shall be Master No 4 brass padlock, keyed alike, furnished with two keys per lock. Bolts in locking device shall be stainless steel.

J. Brackets, Supports and Miscellaneous Metal Parts shall be stainless steel and provided as needed to support piping, floats, controls and their equipment for a complete installation. Anchor bolts shall be 300 series stainless steel and shall be provided. All metal shall be stainless steel. A lifting chain and hook, minimum 3/8" stainless steel, shall be provided with each pump. Three feet of excess chain above the top of the wet well shall be provided to expedite removal. A

chain/motor electric cable holder shall be provided and appropriately sized to accommodate the lift chains and motor electrical cables provided without deformation. Chain/electric cable holder shall include extra heavy duty 3/8-inch rod hooks for attaching control floats, lifting chains, and other wet well accessories (6 hooks minimum) and be located on the side of the wet well hatch opening opposite to the discharge piping.

K. Pump Guide Rails with End Brackets shall be provided for each pump. Guide rails shall be a minimum of 2.0-inch stainless steel pipe and sized to fit the discharge base and the sliding bracket and shall extend upwards from the discharge base to the access hatch cover at the top of the wet well. Intermediate rail braces shall be supplied and solidly secured to the wet well wall. Guide rails and brackets shall be 316-stainless steel. Each pump shall connect automatically and firmly to the discharge piping when lowered into place. It shall not be necessary to enter the wet well to remove or replace a pump.

L. Power-Pole: The contractor shall confirm service arrangements with power company before commencing work. Contractor shall run underground wiring to nearest transformer or hand hole. If no power pole is available, the contractor shall provide a power pole and shall connect to Local Power Company at pole's weatherhead. Pole shall have mounted on it:

1. 250-watt mercury vapor lighting fixture, 120-volt with photo cell and 2-foot mounting arm.
2. A lightning arrestor
3. A volt surge capacitor
4. The meter base box, by Local Power Company
5. A fusible, 304 stainless steel disconnect switch

M. Motor Branch Components:

1. Mounting: All motor branch components shall be of the highest industrial quality, securely fastened to a removable sub-plate with screws and lockwashers. The sub-plate shall be tapped to accept all mounting screws. Self-tapping screws shall not be used to mount any components.
2. Circuit Breaker and Operating Mechanisms: A properly sized heavy-duty air circuit breaker shall be furnished for each pump motor, and shall have a symmetrical RMS interrupting rating as noted on the drawings. All circuit breakers shall be sealed by the manufacturer after calibration to prevent tampering. A padlocking operating mechanism shall be installed on each motor circuit breaker. Operating handles for the mechanisms shall be located on the exterior of the control compartment door, with

interlocks which permit the door to be opened only when circuit breakers are in the OFF position.

3. Motor Starters: An open frame, across-the-line, NEMA rated magnetic motor starter shall be furnished for each pump motor. Starters of NEMA size 1 and above shall be designed for addition of at least two auxiliary contacts. Starters rated "O", "OO", or half size are not acceptable. Power contacts shall be double-break and made of cadmium oxide silver. All motor starters shall be equipped to provide under-voltage release and overload protection on all three phases. Motor starter contacts shall be easily replaceable without removing the motor starter from its mounted position. Acceptable starters are Furnace, GE, Square D or Westinghouse.

N. Alarms:

1. High Pump Temperature Protection: Each control panel shall be equipped with circuitry to override the level control system and shut down the pump motor(s) when required to protect the pump motor from damage caused by excessive temperature. A thermostat shall be mounted in each motor to detect its temperature, and a single relay shall be supplied for each thermostat. If the pump motor temperature should rise to a level which could cause damage, the thermostat shall cause the signal relay to drop out of the motor starter. An electrical indicator, visible on the front of the control panel, shall indicate that the pump motor has been stopped because of a high temperature condition. The pump shall remain locked out until the pump has cooled and the circuit has been manually reset. Automatic reset of such a circuit shall not be acceptable.
2. High Water Alarm: When the wet well level reaches a preset high water level, a switch shall energize a signal relay circuit to visibly indicate such on the front of the control panel. The relay shall maintain the signal until manually reset.

O. Wiring: The pumping system as furnished by the manufacturer shall be completely wired, except for the power feeder lines to the panel main disconnect, final connections to remote alarm devices, pumps, and level switches. The Contractor shall be responsible for all interconnecting wiring and conduit. All wiring, workmanship, and schematic wiring diagrams shall be in compliance with applicable standards and specifications set forth by the National Electrical Code (NEC).

1. Wire Identification and Sizing: Control circuit wiring inside the panel, with the exception of internal wiring of individual components, shall be 14- gauge minimum, Type MTW or THW, 600 volts. Wiring in conduit shall be 14-gauge minimum. Motor branch wiring shall be 10-gauge

minimum. Motor branch conductors and other power conductors shall not be loaded above 75°C temperature rating. Wires shall be clearly numbered at each end in conformance with applicable standards. All wire connectors in the control panel shall be of the ring tongue type with nylon insulated shanks. All wires on the sub-plate shall be bundled and tied. All wiring outside the panel shall be in conduit.

2. Wire Bundles: Control conductors connecting components mounted on the panel enclosure door shall be bundled and tied in accordance with good commercial practice. Bundles shall be made flexible at the hinged side of the enclosure. Adequate length and flex shall be allowed so that the door can swing to its full open position without undue mechanical stress or abrasion on the conductors or insulation. Bundles shall be clamped and held in place with mechanical fastening devices on each side of the hinge.

P. Power Supply: All stations shall be provided with a control power transformer, single phase primary, to 120 volts/1 ph/60 hertz secondary. Transformer shall be rated for the loads of the lights, alarms and control power. Power service for the pump motor circuits shall be as indicated on the pump data sheets.

Q. Backflow Protection for Potable Water Supply: Backflow preventing devices shall be of the type specified in Section 19 - WATER PIPE, FITTINGS, VALVES, AND APPURTENANCES.

1.03 DESIGN STANDARDS

A. Reference: The Developer shall comply with the applicable regulations established by the Florida Department of Environmental Protection. Additionally, the criteria provided in the Recommended Standards for Wastewater Facilities, Latest Edition, and WEF Manual of Practice No. 9, Latest Edition, may generally be utilized as design guidelines, if not in conflict with state, county, city, or other regulatory agency requirements. See the City of Tavares Standard Details for a standard precast concrete Duplex and Triplex lift station.

B. Pump station structures and equipment shall be protected from physical damage by flooding to the one hundred (100) year flood elevation. An all weather access road shall be provided to the pump station.

C. Design Flows: Sewage pumping stations shall be designed for the total ultimate development flow from all contributory areas. The design average daily flow shall be computed at the unit rates set forth under Section 10, Gravity Sewers. The maximum required pumping capability shall be the product of selected peak factors times the accumulative average daily flow (ADF) from the total service area. In general, the following factors shall be applicable for the range of flow

contributions indicated (million gallons per day average daily flow: MGD - ADF), unless larger values are required or smaller amounts are justified, with prior approval from the City.

Flow Range	Peak Factor
0.00 to 0.05 MGD-ADF	3.5 to 4.0
0.05 to 0.25 MGD-ADF	3.0
0.25 to 2.00 MGD-ADF	2.5
Note: Special analysis shall be made for flows beyond 2.00 MGD-ADF and peak factors less than 2.5.	

D. No sewerage pumping station shall be allowed to be connected to a downstream system that is undersized to handle the DESIGN FLOWS. The developer/contractor shall be responsible for the cost to upsize any downstream affected system components in order for the City to accept the flow. Should the City desire to increase the capacity beyond the added flow, it may participate in the cost.

E. Pump Selection:

1. For pumping stations with a peak flow demand of 1,000 gallons per minute (GPM) or less, a minimum of two pump units of equal capacity shall be provided (with one pump operating to meet peak hourly flow, and one pump on standby). Where the peak hourly design flow exceeds 1,000 GPM, three or more units shall be included in the facility (with two pumps operating to meet maximum demand and one pump on standby).
2. The selected sewage pump system shall have the minimum capability of pumping the design peak flow at the maximum computed system total dynamic head (TDH) requirements.
3. Head-Capacity curves shall be prepared for the proposed pumping system in order to determine the various operational conditions. Hydraulic computations shall be in accordance with good engineering, practice, with pipe friction loss calculated by the “Hazen-Williams Formula”, using standard friction factors based on the materials utilized.
4. Provision shall be made to automatically alternate pumps in use.

F. Wet Well Design:

1. The wet well structure shall provide a minimum capacity between operational water levels sufficient to allow a minimum of 5 minutes between successive starts of the pumps, when the effluent rate is one-half the maximum one pump capacity. The filling time at the initial and design average flow shall not exceed 30 minutes unless the facility is designed to

provide flow equalization. Low water levels shall provide adequate submergence to preclude pump inlet vortexing, air binding or other design considerations. Operational maximum high water levels shall not exceed the invert elevation of the lowest influent pipe, with high water alarm no higher than the 0.8 of said pipe. A minimum size hopper bottom shall be provided, with the wet well floor sloping to the bottom at a slope of not less than one to one (1/1). Additionally, where the wet well extends below the ground water table, the structure shall be designed to eliminate any possibility of flotation.

2. Minimum wet well size shall be 6-foot diameter. A 12-foot-diameter wet well (minimum) shall be utilized in cases where the pump discharge piping (in the wet well) is 10-inch diameter or larger.
3. The wet well shall have a vent.
4. Odor control shall be provided as required and specified by the City utility department for remote stations and/or areas of low flow, at the discretion of the Utility Director.
5. Any station that receives flow from another lift station or which is designed to pump 250 GPM or more shall be provided with a cast in place HDPE liner.

G. Station Water System (Non-Potable): All sewage pumping stations shall be provided with a station water system, with adequate capacity and pressure, for wash down or other requirements. System must meet City's requirement for cross-connection and back flow prevention.

H. Emergency Power Provisions: Generators and Emergency Power Connections. It is in the best interests of the public to maintain uninterrupted wastewater flow even during periods of commercial power outages. Therefore, any lift station with a design wastewater flow of 250 gpm or greater will be provided with an onsite standby, diesel, power generator and automatic transfer switch. In addition, at the discretion of the Director of Environmental Services, any proposed station that is located in a remote area, or area located at a considerable distance from the Environmental Services Offices, may be required to be equipped with an emergency generator. Any other lift station not falling onto the above criteria shall be equipped with standby power generator connections for emergency auxiliary pumping. Standard generator plugs shall be as follows:

1. All 240 V, 3PH plugs shall be Pyle National JRE-4100.
2. All 480 V, 3PH plugs shall be Russell Stoll Model #JRS2044MR.
3. All 240 V, 1PH plugs shall be Russell Stoll Model #JRS1044FR.

I. Sewage Pumps, Motors, and Standby Generators:

1. Sewage pumping units shall be capable of handling raw, unscreened sewage and shall be capable of passing a sphere of at least 3 inches in diameter and the suction and discharge openings shall be at least 4 inches in diameter. Pumps shall be electric motor driven and of a proven design that has been in sewage service under similar conditions for at least 5 years. Pumps shall provide the required peak design performance requirements and be suitable for operation within the total hydraulic range of operation. Pumps shall be as manufactured by Hydromatic or EMU. Also provide a 3-inch camlock quick coupling for emergency by-pass at pumping stations with plug valve.
2. Operating conditions and unit sizes shall be shown on the drawings.
3. The pump design operating conditions shall be within 20% +/- of the best efficiency point, unless otherwise approved by the City. When possible, the pump selection shall be made in the center of the family of curves.
4. Pump motors should be non-overloading, excluding service factor, throughout the entire operating range of the pumps. Two or more normally closed heat sensing miniature switches connected in series and embedded within the motor windings shall be provided to shut off power and initiate alarm light for motor over-temperature condition. See attached drawing.

J. On-Site Standby Generator: See Section 14 of these specifications for information on Standby Generators for Lift Stations.

K. Pump Controls & SCADA System: See Section 13 of these specifications for information on the Pump Control and SCADA control panels.

L. Factory Built Facilities: Factory built facilities shall have prior City approval before inclusion in plans.

M. Valves:

1. Valve Vaults: Valve vaults must be a minimum of 6 feet by 6 feet (inside dimension), with no less than 12 inches from the sidewall to the valve clearance. Vault must be coated, with Inextol epoxy inside and outside with a finish coat of 32 mils. All metal on the inside of the valve vault shall be coated with Inextol Epoxy and will also have a finish coat of 32 mils.

N. Valves: A shutoff and check valve shall be placed on the discharge line of each pump outside the wetwell in a separate valve vault. The check valve shall be located between the shutoff valve and the pump. All valves used in station valve

boxes (except for check valves) shall be plug valves. All valves shall be in accordance with Section 19 - WATER PIPE, FITTINGS, VALVES, AND APPURTENANCES.

O. Each pump station shall be fenced or secured in a locked building/enclosure or be located in a restricted access area to prevent access by unauthorized persons. A weather durable sign with a 24-hour emergency telephone number shall be located at a conspicuous point on the fence or structure of the pump station, unless the pump station is located within a restricted area.

1.04 EMERGENCY POWER PROVISIONS

A. It is in the best interests of the public to maintain uninterrupted wastewater flow even during periods of commercial power outages. Therefore, any lift station with a design wastewater flow of 250 GPM or greater will be provided with an onsite standby, diesel, power generator and automatic transfer switch. In addition, at the discretion of the Utility Director, any proposed station that is located in a remote area, wetland, or area located at a considerable distance from the operation center, may be required to be equipped with an emergency generator. Refer to Section 14, Standby Generator, for technical specifications on automatic standby emergency generator with diesel engine drive and above ground fuel storage tank. All generators shall be sized to run two pumps, at a minimum.

1.05 INSTALLATION

Submersible Pump Facilities: Installation shall include the removable pump units, aluminum access frame and cover, stainless steel pipe pump guide bars, pump discharge connection and other necessary appurtenances. All piping and structures shall be installed in accordance to the manufacturer's recommendations, Section 7 Utility Excavation, Trenching, and Backfilling, as shown on the contract drawings and described herein.

A. Equipment furnished and installed shall be fabricated, assembled, erected and placed in proper operating condition in full accordance with drawings, specifications, engineering data, instructions and recommendations of the equipment manufacturer, unless exceptions are noted and approved by the City. Prior to commencing the pumping station installation and/or the furnishing of replacement pumps, the pump distributor shall submit for approval, detailed and dimensioned shop drawings for pumps including factory curves of identical model pumps provided to the City. The pump distributor shall furnish and deliver at the time of acceptance for use of the pumping station and/or of the replacement pump(s) by the City 3 computer diskettes (Microsoft Word) containing Operation & Maintenance data and motor and pump nameplate data (including serial numbers) for each pump supplied.

B. Reference Points and Layout: The Contractor shall be responsible for setting all grade stakes, lines and levels. The Contractor or Contractor's Surveyor will provide centerline of construction and will establish a bench mark. Any reference points, points of intersection, property corners, or bench marks, which are disturbed during construction, shall be restored by a Land Surveyor registered to practice in the State of Florida, and all costs thereof shall be borne by the Contractor. The Contractor shall assume all responsibility for the correctness of the grade and alignment stakes.

C. The contractor shall be responsible for all bypass pumping as required. A bypass pumping plan shall be submitted at the time or permit application to the environmental services director. Citizen consideration will be reviewed when bypass pumping equipment is required. Sound attenuating enclosures may be required at the discretion of the Environmental Services Director.

D. The station and valve vault shall be installed level and plumb by the Contractor in accordance with the manufacturer's recommendations, Section 7 Utility Excavation, Trenching, and Backfilling, as shown on the plans and described herein.

E. Wet well and Valve Vault shall be handled and installed in such a manner and by such means as to prevent damage. All sections damaged during handling will be rejected as directed by the Engineer of Record and replaced at no additional cost to the City. All holes in sections used for their handling and the annular space between the wall and entering pipes shall be thoroughly plugged with an approved, non-shrinking mortar or grout, applied and cured in strict conformance with the manufacturer's recommendations, so that there will be zero leakage through openings and around pipes. The mortar shall be finished smooth and flush with the adjoining interior and exterior manhole wall surfaces. Wet well base shall be installed on a firm 12-inch (minimum) leveling course of granular material (57 stone) foundation as shown on the drawings so prepared to prevent settlement and misalignment.

F. Wet Well Sections shall be installed plumb and with all pipe holes at the proper elevation. If not approved otherwise by the City, the construction schedule for setting wet well base and riser sections shall be approved by a City representative. The City representative shall be present, on site, during this installation.

G. Wet Well Riser sections of the wet well shall be installed using joint sealant and shall be made in accordance with manufacturer's recommendations and to insure a watertight installation. Steps shall be in proper alignment and shall be placed so that safety entry-egress to the wet well is achieved.

H. Wet Well Joints shall be sealed with 'RAM-NEK' joint sealer over the entire joint surface, with joints pre-primed. Joints shall be water tight. Upon completion of installation, excess joint sealer shall be trimmed flush with inside and outside surface of structure. All exterior joints of precast concrete wet wells shall be sealed with one 12-inch-wide exterior joint sealant membrane centered on joint. The tape shall be capable of sealing joints against groundwater infiltration. The installation of the membrane shall be in conformance with the recommendations of the manufacturer. Surface must be smooth, clean, dry and free of voids, loose aggregate, dirt or other matter that will hinder the adhesion of the membrane. A primer shall be used in accordance with the recommendations of the membrane manufacturer. If recommended by the manufacturer, heat shall be applied to all areas being sealed. Each joint shall be wiped inside the manhole with cement mortar after assembly.

I. A flexible pipe connector shall be used to connect sewer pipes to the precast concrete wet well.

J. During the wet well invert construction stage, the interior annular space between the exterior of the pipe and the interior of the connector shall be filled with a Type II lean cement grout by the Contractor.

K. Corrosion Protection: Precast concrete wet well interior shall be lined with a cast in place HDPE liner (Agru Sure Grip Liner, or approved equal) or Green Monster Liner (or approved equal) with a minimum thickness of 2 mm, mechanically anchored to the concrete and with all joints extrusion welded by certified welders. The exterior of the wet well (below grade), shall be given two coats of bituminous water proofing materials which meets the coating requirements as specified for sewage manholes in Section 10, Gravity Sewers. All exposed metal shall be painted with two coats of exterior black enamel paint. Inside and outside of valve vault shall be painted with two coats of "Poxitar" or equal applied as per manufacture's recommendations.

L. Pumps and piping shall be installed in accordance with the written instructions provided in the shop drawings and indicated on the plans. The manufacturer shall furnish such detailed instructions as may be required for proper installation. He shall also furnish the services of a qualified service representative to inspect equipment installation, make minor adjustments and place equipment in permanent operation. The manufacturer's representative shall provide whatever items required for proper installation, operation and instruction. Service shall be not less than two days and divided into not less than two trips to the site. The first trip shall be for inspection, minor adjustments, initial operational services and initial instruction. A second trip, 30 days later after pump has been placed into operation, shall be for final adjustments and orientation of the City's operation

personnel. The City and Engineer of Record shall be notified at least 24 hours in advance of each trip. A Manufacture supplied pump nameplate for each pump shall be placed (with adhesive) inside the front panel of the pump control panel.

M. Pump discharge base shall be leveled, plumbed and aligned into position to fit connecting piping. The discharge base shall be solidly secured to the wet well floor using a 1-inch thick steel hold-down plate (see details) and appropriately sized 316 stainless steel anchors then grouted after initial fitting and alignment and before final bolting of the discharge piping. This work shall be inspected by the City prior to any liquid being allowed into the wet well. After final alignment and bolting, pump discharge base and all connections shall be inspected. If any movement or opening of any joints is observed, any and all piping, including pump discharge base, shall be corrected.

N. Pump performance shall be stable and free from cavitations and noise throughout the specified operating head range at minimum suction submergence.

O. Lifting Cables shall be cut off flush to finish grade after installation.

R. Float Switches shall be installed separately and at elevations shown on drawings and shall be equipped with individual weights in the floats or on the cables.

P. Backflow preventing device shall be installed as specified in Section 19 - WATER PIPE, FITTINGS, VALVES, AND APPURTENANCES. Backflow device shall be tested by a certified tester within five days of installation, with written results provided to the City.

Q. After installation and cleaning up of construction debris, wet well shall be provided with water sufficient to provide start up and pump down tests as necessary to verify pump operation and efficiency for as long a period of time as necessary to accomplish such tasks.

R. Changes in structures, piping, electrical work, or other work which is necessary to accommodate equipment supplied by the Contractor shall be made at no additional cost to the City. No equipment structure shall be constructed until certified equipment dimensions and requirements are available to the Contractor in the form of approved shop drawings.

1.06 QUALITY ASSURANCE AND CERTIFICATION

A. Factory Pump Certificate Test. The pumps and motors shall be given an operations performance test in accordance with the standards of the Hydraulic Institute. Recordings of the tests shall substantiate the correct performance of the

equipment at the design submergences to include a ten percent variance of the head, capacity, speed and efficiency as herein specified. A complete written report certifying the foregoing test results shall be submitted to the Engineer of Record prior to shipment of pumps.

B. The pump manufacturer shall also perform the following testing on each pump prior to shipment.

1. Megger the pump motor and cable for insulation breaks or moisture intrusion.
2. Prior to submergence, run pump dry and check for correct rotation.
3. Pump shall be run continuously for 30 minutes in a submerged condition, with a minimum submergence of 10 feet.
4. Pump shall be removed from test tank, meggered immediately for moisture and all seals checked for water intrusion.
5. Pumps shall be operated at a minimum of six points to establish the hydraulic curve. KW input shall be monitored and recorded. One test point shall be performed with discharge valve closed. Pumps shall develop appropriate capacity and head within Hydraulic Institute Standards without excessive noise, vibration or cavitations. If specifically requested by the City a vibration test shall be preformed on each pump to demonstrate compliance.
6. For pumps less than 100 Hp, the pump supplier shall submit copies of certified Hydraulic Institute test reports including factory pump curves of identical model pump (s) provided to the City (in lieu of written certified test reports for each pump supplied).
7. For pumps 100 Hp and greater, the above certified pump performance test (at a minimum) must be completed on each actual pump supplied. A City representative(s) may choose to be present to witness the certified test (City's travel expenses by City).

C. The manufacturer shall demonstrate the ability to fabricate the various pump station structural components, as specified, utilizing adequate numbers of skilled workmen, tools and facilities.

D. Concrete Certification. All concrete units shall be poured and vibrated using steel forms, in a PCI (Prestressed Concrete Institute) certified manufacturing facility.

E. Final Certification: After installation and final testing of equipment and instrumentation, the manufacturer furnishing supervision and/or inspection services shall make written certification to both the Engineer of Record and the City that his equipment and the controls have been properly installed and operate

in accordance with the specifications and drawings, and that the operating and maintenance instructions have been furnished to the Engineer of Record.

F. Warranty:

1. Pump Station Warranty: The station manufacturer shall warranty the complete pump station and all equipment provided to be free from defects in materials and workmanship for two years from the date it is placed in permanent operation by the manufacturer's representative. Warranty shall include 100% coverage of the manufacturer's labor, materials and equipment to remove and replace defective materials and workmanship at no cost to the City.

2. Pump Manufacturer Warranty: The manufacturer shall warrant to the City for permanent installation in municipal sewage service submersible pump and motor against defects in materials and workmanship including normal wear and tear to the following parts for a period of 5 years, mechanical seals, bearings, shafts, motor electrical cables and motor stators.

   a. The manufacturer shall warrant to the City for permanent installation in municipal sewage service submersible pump and motor against defects in materials and workmanship including normal wear and tear to the following parts for a period of 5 years, mechanical seals, bearings, shafts, motor electrical cables and motor stators. The warranty shall include no less than 100% coverage for original equipment manufactured (OEM) parts and in-shop labor for pump/motor repairs for the full 5 years at NO COST to the City. This warranty shall not apply to parts that fail due to abuse, neglect, mishandling, or acts of God. The warranty period shall commence upon the date of final acceptance for use the pumping station and/or of the replacement pump by the City.
   b. Verification of guarantees of performance and warranty certificate shall be indicated in the shop drawing submittal and in the Operation and Maintenance diskettes (Microsoft Word).
   c. The pump distributor shall employ and make available proficient manufacturer-authorized service technicians to perform service calls to pumps supplied to the City on a 24-hour basis, 7 days a week. The pump distributor shall provide service technicians company-owned service vehicles equipped with lifts/booms capable of retrieving all sizes of submersible pumps from wet wells, all necessary tools, test and safety equipment, etc., that are required to make field repairs. Service personnel shall adhere to all of the City's Safety Rules & Regulations and be trained and

certified for confined space entries and carry liability and workers' compensation insurance.

d. During the warranty period, the pump distributor shall at no cost to the City repair and re-install the subject pump within 24 hours or provide a loaner pump(s) which can be transported, installed, and capable of maintaining operation of the City's sites. The location address, contact names, phone numbers, (including emergency, mobile, etc.) and fax numbers of the manufacturer-authorized warehouse and service center shall be indicated in the shop drawing submittal and in the Operation & Maintenance diskettes (Microsoft Word).

3. Specialty Wet Well Liner Manufacturer Warranty: The liner manufacturer shall warrant the liner against defects for at least 5 years after the date of acceptance by the City. Defects are defined as cracking, delaminating or leaking. The warranty shall require the manufacturer to supply all necessary labor, materials, and equipment to repair defects to satisfaction of the City. The Contractor and/or manufacturer shall not make any exemption or exception to the above stated conditions or warranty.

4. Fiberglass Wet Well and Valve Box Warranty: The basin/structure manufacturer shall warrant the wet well against defects for at least 5 years after the date of acceptance by the City. Defects are defined as cracking, delimitation or leaking. The warranty shall require the manufacturer to supply all necessary labor, materials and equipment to repair defects to the satisfaction of the City. The contractor and/or manufacturer shall not make any exemptions or exception to the above stated conditions or warranty.

1.07 PUMP DATA SHEET

A. The Pump data sheet submitted to the City by the Contractor prior to pump purchase shall contain the following:

1. Pump Station No:
2. Description - Service: Solids Handling Pump Station
3. GPM:
4. Total Head - Feet:
5. Fluid: Domestic Wastewater
6. H.P.:
7. Temperature Degree F.: Ambient
8. pH: 5 to 8
9. Specific Gravity: 1.0
10. Minimum Sphere Diameter: 3 inches

11. Power Service:
12. Maximum Speed:
13. Number Required:
14. Electrical Cable Required/Pump:
15. Electrical Circuit Breaker Rating: Supplier to furnish
16. Maximum Full Load Amps: Supplier to furnish
17. Maximum Starter Amps: Supplier to furnish
18. Maximum Locked Rotor KVA: Supplier to furnish
19. NEC Code Letter: Supplier to furnish
20. Remarks:

1.08 TESTING

A. Field Acceptance Testing:

1. Pre-Final Inspection: Prior to final inspection, the Contractor shall conduct a pre-final site inspection (including energizing each pump), in the presence of a City representative. Any deficiencies noted at this time shall be corrected prior to scheduling of the final inspection.

2. Final Inspection: The Contractor shall be responsible for conducting the following field acceptance tests and start-up procedures in the presence of a City representative. The Contractor shall notify the City, the Engineer and the pump manufacturer's representative 48 hours prior to start-up. The time and date of this final inspection shall be scheduled by the City. The Contractor shall furnish all labor, piping, equipment, water and materials required to perform the acceptance testing. The Contractor shall ensure the force main is full of water prior to the pump test.

3. Wet well shall be tested for exfiltration by filling up with water to a level 2 feet below the top of the flat slab and measuring the amount of drop over one hour. Exfiltration shall be 0 (zero) gallons per foot diameter per foot depth per day.

4. The Contractor shall demonstrate that the pump mounting and guide rail systems are fully operational. The Contractor shall remove and reinstall the pumps in the presence of the City representative, prior to conducting the performance test.

5. Pump Performance: Prior to acceptance, as part of the final inspection, and prior to placing the station in operation, the Contractor shall conduct a pump performance test. Pumps shall operate according to the operating conditions indicated on the drawings without excessive vibration or

overheating. Testing shall be performed using clean water. The Contractor shall supply water at its own expense to perform the required testing. Pumping rates shall be determined by pumping a calculated volume of water in a specified time interval. Head and flow conditions shall be measured and recorded. Water levels during testing shall fall within the pump control levels shown on the drawings. Amperage draws shall be monitored to determine effectiveness and efficiency of equipment. The test shall be repeated until satisfactory results are obtained. The test results shall be recorded on the Pump Test Report sheet included at the end of this section. If the Contractor is unable to demonstrate to the City that the pumping unit performs satisfactorily, the unit shall be rejected. The Contractor shall then remove and replace the defective unit at its own expense. Satisfactory performance includes, but is not limited to, the following:

a. Pumps: Pumps shall deliver rated GPM at rated TDH.
b. Motors: Running amperage shall be noted and recorded on each leg of power cord while pump is operating under full load.
c. All self test trip relays shall demonstrate ability to simulate a fault condition. All test results shall be recorded on the pump test report and be submitted to the Engineer.
d. Pumps shall operate within 5 % of the approved, certified, head-capacity curve.
e. Following performance testing, pumps shall be meggered for pump-moisture intrusion.
f. Pump spare parts shall be per manufacture's recommendations.
g. For dry-pit submersible pumps, the closed loop cooling system shall provide adequate cooling, in accordance with pump manufacturer's recommendation, throughout the pumping range.

6. SCADA Inspections: A City representative shall be present to verify that the pump sensors and controls perform control sequences satisfactorily including but not limited to: correct start and stop elevations, proper high level alarm functions. City SCADA equipment representative is Multitrode ™.

PUMP TEST REPORT

PROJECT:_____ DATE:_____
LOCATION: _____
GPS COORDINATES: _____
LONGITUDE / LATITUDE: _____
WATER METER NO: _____
ELECTRIC METER NO: _____

PUMP DATA
Manufacturer: _____
Model / Impeller Size: _____
Motor HP: _____RPM: _____
Wetwell Diameter: _____Gals / V. Ft_____
Pump Design Point:_____GPM @ _____Feet T.D.H. _____

TEST DATA
Pump No: _____
Serial No: _____
Start Time: _____
Stop Time: _____
Elapsed Time (min.): _____
Water Elevation Start (HWL) (ft.): _____
Water Elevation Stop (MWL) (ft.): _____
Net Draw down (ft.) _____
(Subtract water El. Stop from water El. start)
Total Gallons: _____
Gallons / Minute: _____
(Divide total gallons by minutes)
Pressure Gauge Reading (ft.) _____
Gauge Elevation to MWL (ft.)_____
Height to Gauge (ft.) _____
Total Head @ Pump (ft.) _____
Ampmeter Reading (amps) _____
Guide Rail Operation Checked _____

Contractor Representative: _____

City's Inspection Representative: _____

City's Maintenance Representative: _____

Pump Manufacturer's Representative: _____

Engineering of Record Representative: _____

END OF SECTION

SECTION 13
PUMP CONTROLLER/REMOTE TERMINAL UNIT (RTU)

PART 1 GENERAL

1.01 SCOPE OF WORK

The Contractor shall provide all design, labor, tools, materials, equipment, transportation, services, supervision and testing necessary for the construction of a Wastewater Pump Station Control System with Remote Terminal Unit (RTU) as described in this Section.

A. The Contractor shall furnish, install and place into operation a pump control panel housing the pump controller, remote telemetry unit (RTU), and other electrical/controls equipment necessary for the control and monitoring of the City's wastewater collection system, as described in this Section. The control panel is to be completely factory assembled, wired, and tested before shipment.

B. The contractor shall modify existing MTU (Master Telemetry Unit)/Computer HMI package located at the City's treatment facility. The RTU at the lift station shall monitor and transmit the lift station status to the existing MTU controller/transceiver for monitoring.

C. All equipment, materials, programming, and services, in this Section shall be supplied by the Contractor who shall coordinate and have responsibility for interconnecting with equipment now existing and/or equipment being installed under this contract.

D. The system described in this Section is a micro controller based Radio Telemetry and Control system. This system shall communicate directly with the Woodlea WWTP plant site. The site shall acquire data from the remotes, report status and provide data logging capability. The remote station shall monitor and transmit status on request.

E. The Contractor shall furnish and install all hardware, software, supplies and services necessary for the construction of the control system including radios, antennas, modems, radio frequency acquisition, FCC license (if necessary), system training, and documentation.

1. All components shall be the products of companies normally engaged in the manufacture of such equipment and shall be furnished and installed by a single vendor. The equipment vendor, or its representative, shall perform all system Engineer of Record certifications and assume full responsibility for successful functional operations of the equipment in accordance with the performance requirements set forth in these specifications. The

Contractor shall further be responsible for providing the complete verbal and written operating and programming procedures and instructions to City-designated operating personnel.

2. At a minimum, the scope of work shall include the following major components:

   a. Complete Pump Station Control System with RTU for remote monitoring and control.

   b. All configuration, testing, startup, and training services.

   c. Configuration, programming, and development of existing SCADA/MTU system.

3. All wiring between the control panel equipment and sensing devices shall be furnished and installed by the Contractor in accordance with national and local electrical codes, and these specifications.

1.02 SYSTEM CONFIGURATION

The Contractor shall furnish and install, but not be limited to, the following:

A. One (1) RTU including service port, power supply, batteries, function modules and antenna per lift station that is to be provided or retrofitted. Work shall include all labor and materials to completely furnish and install the RTU. Discrete instrumentation and control devices shall be furnished as described in this Section and/or shown on the drawings.

   1. Function modules shall have 25% of input/output points reserved for future use.

1.03 RELATED WORK

A. The provisions of all other technical sections of these specifications are fully applicable to this section as if incorporated in this Section.

1.04 PERMITS, FEES AND LICENSES

The Contractor shall obtain all necessary permits, licenses and inspections required for the work of this section and pay all fees and charges incidental thereto. The Contractor shall deliver to the City all licenses and certificates of inspection issued by authorities having jurisdiction.

A. If necessary, the RTU Supplier shall obtain the necessary FCC license for the City to operate the system; pay for all fees; perform a radio survey and submit all the

necessary forms to obtain the license for the City. A new licensed frequency, if required, shall be isolated from the nearest user on the same frequency by a minimum of 75 miles for 900 MHZ, 100 miles for UHF and 150 miles for VHF. Written proof of the frequency isolation is required. The Contractor shall guarantee that the new frequency obtained is free from interference, and will provide 98% or greater path reliability, for a period of two years. Should the frequency have interference or communications problems during this warranty period, the Contractor shall, at no cost to the City:

1. Obtain a new license for a frequency without the interference or communications problems.

2. Reprogram and/or replace the radios to operate on the new frequency.

3. Replace the antennas if the new frequency is in another band.

4. Pay all fees and other costs incurred in modifying the existing frequency or obtaining a new frequency.

B. The Contractor shall perform a radio path analysis for the RTU. The path analysis shall provide a minimum of 15 dB of fade margin for all proposed radio systems. The 15 dB fade margin shall be demonstrated by inserting a 15 dB pad into the Central Site coax cable and thereafter establishing reliable communications with each remote site.

1.05 REFERENCES (NOT USED)

1.06 SUBMITTALS

A. Material and Equipment: The Contractor shall submit a complete list of equipment and materials, to be incorporated in the work.

1. The list shall include catalog numbers, cut sheets, diagrams and other descriptive data required to demonstrate conformance to the specifications. Partial lists will not be acceptable.

2. The basis of acceptance shall be the Manufacturer's published ratings for the equipment. Manufacturer shall be regularly engaged in manufacture of products specified.

B. Submittals shall include data for the following items:

1. Control panel and components
2. RTUs
3. Antennas

4. Mast
5. HMI Graphic Screen Templates
6. HMI Report Templates
7. Spare Parts List
8. Warranty
9. Services Outline

C. Submittals shall include manufacturer's literature, cut sheets, wiring diagrams, schematics, and details of construction including dimensions, materials, finish, accessories, trim and ratings for all equipment.

1.07 OPERATION AND MAINTENANCE MANUAL

A. Before final acceptance of this project, an operation and maintenance manual shall be submitted to the Engineer of Record. The manual shall include manufacturer's literature as outlined in Article 1.06 above, drawings corrected per submittal review comments and modifications, and lists of suppliers and/or service shops that can provide parts and accessories and equipment repair for the items of equipment listed above. These lists shall include a contact name, telephone number and address.

1.08 POSTED OPERATING INSTRUCTIONS

A. Operating instructions approved by the City shall be provided for each principal piece of equipment for the use of operation and maintenance personnel. The operating instructions shall include wiring and control diagrams showing the schematic layout of the system. Operating instructions shall be printed or engraved and shall be framed under glass or in approved laminated plastic and posted where directed by the City. Operating instructions shall be attached to or posted adjacent to each principal piece of equipment and shall include such instructions as start up, proper adjustment, operation, shutdown, safety precautions, procedure in the event of equipment failure, and any other necessary items of instruction as recommended by the manufacturer of the equipment.

1.09 DELIVERY, STORAGE, AND HANDLING

A. <u>Delivery</u>:

1. After completion of shop assembly, factory test, and approval, all equipment, cabinets, panels, consoles shall be packed in protective crates and enclosed in heavy-duty polyethylene envelopes or secured sheeting to provide complete protection from damage, dust, and moisture. Dehumidifiers shall be placed inside the polyethylene coverings. The equipment shall then be skid-mounted for final transport. Lifting rings shall be provided for moving without removing protective covering.

Boxed weights shall be shown on shipping tags together with instructions for unloading, transporting, storing and handling at job site.

2. Special instructions for the correct field handing, storage, and installation required by manufacturer for protection of equipment and personal shall be securely attached to each piece of equipment before packaging and shipment.

B. Identification:

1. Each component shall be tagged to identify its location and function in the system. Identification shall be prominently displayed on the outside of the package.

C. Storage:

1. Equipment shall not be stored outdoors. Equipment shall be stored in dry permanent shelters, and shall be adequately protected against physical damage. If any apparatus has been damaged, such damage shall be repaired by the Contractor at no cost to the City. If any apparatus has been subject to damage by water, it shall be replaced or put through such tests as directed by the Engineer of Record. The Engineer of Record maintains sole responsibility for acceptance of test results. This shall be at the cost and expense of the Contractor.

1.10 WARRANTY

A. The System Supplier shall warrant all hardware and software provided under this contract against all defects in material and workmanship for a period of two (2) years from date of final acceptance. The System Supplier shall warrant the telemetry software to be free of defects and provide free software updates for the system for two (2) years. Included with the Contractor's quote shall be maintenance and training services to be performed during the two year warranty period.

1.11 TRAINING

A. The Contractor shall conduct the following minimum training:

1. One full (8 hour) day at the City's facility during the time of system start-up and before final acceptance of the system.

2. One full (8 hour) day 2 to 3 weeks after system start-up.

B. This training shall be supplied to at least two members of the operating crew. This training shall consist of start-up, general maintenance instruction, and

troubleshooting procedures. It shall include a review of material presented at the last formal training school for factory and dealer service personnel.

PART 2 PRODUCTS

2.01 MANUFACTURER QUALIFICATIONS

A. All products offered shall be supported by descriptive literature and/or diagrams.

B. All equipment shall be the Manufacturer's latest and proven design.

C. Acceptable RTU model: MultiTrode MSU-3MP or other as approved by the Utility Director or his Designee.

2.02 GENERAL REQUIREMENTS

A. UL Approval: All pump control system equipment shall be constructed in compliance with Underwriters Laboratories Industrial Control Panels, utilizing UL listed and recognized components where applicable.

B. Incoming Service:

1. The incoming service for the pump control panel shall be 120 volts, single phase, two wires, 60 Hertz.

2. An EDCO HSP-121 lightning arrestor shall be supplied in each pump station control panel and shall be connected to each line of the incoming side of the power input terminals. The arrestor shall protect the pump control system against damage as the result of transient voltage surges caused by lightning interference, switching loads and power line interferences.

3. Each pump control system circuit shall be supplied with a properly sized control power circuit breaker. The main breaker shall provide protection for all power and control wiring within the enclosure.

4. Transient protection shall be provided for all analog signals inside the enclosure.

C. Wiring:

1. All power wiring shall be minimum 600-volt UL type MTW or AWM and have a current-carrying capacity of not less than 125% of the full load current. The conductors shall be #14AWG minimum and shall conform with the national electric code, state, local and NEMA electrical standards. For ease of servicing and maintenance, all wiring shall be color coded and

numbered. The wire color code and number shall be clearly shown on the drawings, with each wire's color and number indicated.

2. All control wiring shall be contained within wiring duct with covers as manufactured by Panduit or equal. Where dimensional constraints prevent the use of wiring duct, wires shall be trained to panel components in groupings. The wire groupings shall be bundled and tied not less than every three inches with nylon self-locking cable ties as manufactured by Panduit or equal. Every other cable tie shall be fastened to the enclosure door or inner device panel with a cable tie mounting plate with pressure tape. Where wiring crosses hinged areas such as when trained from the inner device panel to the enclosure door, spiral wrap shall be used.

3. Cable markings shall be imprinted on each cable at 12" intervals for the entire cable length inside the enclosures.

D. Signal Transient Protection:

1. Transient protection shall be integrally provided for all equipment to protect all instrumentation and telemetry devices either receiving or sending signals. This means all signals shall be protected on the transmitting and receiving ends. The transient protectors shall be a three-stage surge suppression device, which shall effectively arrest most transients encountered in an instrumentation environment. Transient protectors utilizing single or dual stage suppression devices shall not be acceptable.

2. The first stage of the transient protector shall consist of a gas tube arrestor connected across the signal wires and to ground. This stage shall be designed to suppress transients greater than 150 to 300 volts.

3. The second stage of the transient protector shall consist of two varistors each connected between a signal line and ground. This stage shall suppress any transients less than 150 to 300 volts and clamps them to 56 volts.

4. The third stage of the transient protector shall consist of two special purposes high-speed zener diodes that suppress any remaining transients to 51 volts. 50 ohm, 5 watt resistors shall be connected between the stages to dissipate the potential energy of the transients. Transient protectors shall be Model TP as manufactured by Consolidated Electric Company.

E. Condensation Protection: A 120 VAC condensation-protective heater and high temperature cutout thermo switch shall be provided in each new control panel enclosure.

2.03 COMPONENT REQUIREMENTS

A. Remote Terminal Unit:

1. The field hardware shall be of a modular design and incorporate the following features:

   a. Pre-programmed control functionality for pump station application.

   b. Operator interface (graphical LCD with soft keys) with view of level, pump mode, fault status, pump controls, fault reset, etc.

   c. Set point adjustment.

   d. Grouping and alternation.

   e. Level device selection and redundancy.

   f. Station optimization functions to include:

      Max run time (efficiency function)

      Max off time (odor reduction)

      Max starts/hr (pump protection)

   g. Inter-pump start/stop delays.

   h. Well washer controls.

   i. Fault handling (delays, critical/non-critical selection).

   j. Built-in functionality for advanced pump control of up to 6 pumps including grouping and alternation.

   k. Multiple profiles of set points for spill management, energy management, etc.

   l. Dedicated I/O for pump seal, thermal, PT100, conductive level probe.

   m. 3-phase voltage and DC supply monitoring.

   n. Expandable I/O capabilities.

   o. 10Mbit/s Ethernet communications.

p. 115kBit/s RS232 serial communications.

q. DNP3 (level 2) communication protocol.

r. On-board datalogger.

s. Motor efficiency module including insulation resistance testing for motor windings.

2. The system shall support the following communication networks:

a. Licensed radio (VHF & UHF).

b. Wireless LAN (unlicensed spread spectrum).

c. Cellular (CDMA or GPRS).

3. The communications protocol shall include:

a. Change of state reporting.

b. Native date/time and quality stamp for each data point.

c. Event buffering for non-critical data.

4. The RTU shall be mounted in the enclosure on the back plane. The controller shall be provided with a Class II UL listed transformer/ power supply. Voltage regulation and battery charging circuitry shall be integral to the controller.

B. Antenna Subsystem:

The RTU antennas shall be the Cushcraft, Model PLC4510-N with a gain of 11.5 Dbd. The RTU antenna must be connected to the polyphaser surge protector using the DB products. Vapor Bloch VB-8 coaxial cable. The cables must be terminated with silver plated/Teflon RF N connectors. The antenna must be mounted to a bonded mast. The antenna must be aligned to maximize the signal of the Sub Master station (the fire station) using a spectrum analyzer. All outside connections must be sealed with Decibel Products. Vapor Wrap and Alpha FIT321-1-0 sealant shrink tubing. The coaxial cables must be secured to the antennas support structure with 100% stainless steel clamps, Band-it, AE112 cable ties in such a way as not to crush the coaxial cable. The antenna mast and associated hardware must be hot dipped galvanized or stainless steel. If necessary the Rohn 25G towers is an approved material, if there is supporting documentation that this mast will satisfy the requirements of the following: The antenna support structure must follow all Florida Building Code Requirements for constant wind loading without damage. Engineering drawings sealed by a Florida Registered Professional Engineer shall be required.

C. Instrumentation:

1. Level Indicating Transducer (Submersible pressure sensing type)-required.

2. The liquid level of the Wet well shall be sensed by a Consolidated Electric Company Bulletin A1000 Model 157G Submersible Level Transducer. The Transducer shall be a 3-wire type to operate from a supply voltage of 10.5 to 24 VDC and produce a 1-5 VDC instrumentation signal in direct proportion to the measured level excursion over a factory-calibrated range.

3. The Transducer shall be of the solid-state head-pressure sensing type, suitable for continuous submergence and operation and shall be installed in accordance with manufacturer's instructions. The bottom diaphragm face of the sensor shall be installed approximately six inches above the reservoir floor. The sensor shall be mounted using a stainless steel cable system. The Contractor shall install the cable in the lift station wet well.

4. The transducer housing shall be fabricated of type 316 stainless steel with a bottom diaphragm 2-5/8" diameter of heavy-duty, limp, foul-free, molded Teflon (TM) bonded to a synthetic rubber back/seal. A hydraulic fill liquid behind the diaphragm shall transmit the sensed pressure to a solid-state variable-capacitance transducer element to convert the sensed pressure to a corresponding electrical value. The sensed media shall exert its pressure against the diaphragm, which flexes minutely so as to vary the proximity between an internal ceramic diaphragm and a ceramic substrate to vary the capacitance of an electrical field created between the two surfaces. A stable, hybrid, operational amplifier assembly shall be incorporated in the transducer to excite and demodulate the sensing mechanism. The transducer shall incorporate laser-trimmed, temperature compensated, high quality components and construction to provide a precise, reliable, stable output signal directly proportional to the sensed pressure over a factory-calibrated range.

5. The transducer element shall incorporate high over-pressure protection and be designed to withstand intermittent overpressures five times the full-scale range being sensed. Metallic diaphragms shall not be acceptable in that they are subject to damage or distortion. Sensing principles employing LVDTs, resistive or pneumatic elements shall not be acceptable.

6. The transducer/transmitter shall include easily accessible offset and span adjustments in the upper assembly. Span shall be adjustable from 100%

down to 15% of the sensor range. Fine and coarse adjustments for both span and offset shall be provided, using 25-turn potentiometers. Offset and span adjustments shall be non-interactive, for ease of calibration.

7. The internal pressure of the lower transducer assembly shall be relieved to atmospheric pressure through a heavy-duty urethane jacketed hose/cable assembly and a slack PVC bellows mounted in the NEMA 4X vented fiberglass upper assembly. The sealed breather system shall compensate for variations in barometric pressure and expansion and contraction of air due to temperature changes and altitude as well as prevent fouling from moisture and other corrosive elements.

8. The transducer assembly shall be installed in the wet well and directly wired to the RTU and placed in successful operation. It shall be provided with external input power and output signal transient protection, associated control elements as specified in this Section and in accordance with manufacturer's instructions.

D. Spare Parts:

The contractor shall provide the spares need for the system per the manufacturer’s recommendation on application basis.

PART 3 EXECUTION

3.01 LAYOUT OF WORK

A. The Contractor shall lay out the work and shall be responsible for all necessary lines, levels, elevations and measurements. The Contractor shall become familiar with work of other trades engaged in the construction. Exact routing of raceways and locations of equipment may be governed by structural conditions and obstructions. The Contractor shall coordinate with the equipment shop drawings for connections to equipment furnished by others.

3.02 INSTALLATION

A. Instrumentation and accessory equipment shall be installed in accordance with the Manufacturer’s instructions. The locations of equipment, transmitters, alarms, and similar devices shown on the Drawings are approximate only. Exact locations shall be as approved by the Engineer of Record during construction. Perform site visit to obtain all information relevant to the placing of process control work, and in case of any interference with other work, proceed as directed by the Engineer of Record and furnish all labor and materials necessary to complete the work in an approved manner.

B. The Contractor shall furnish all labor, materials, equipment, and incidentals required to remove any existing equipment, as required installing any new equipment provided under this Contract.

C. The Contractor shall also furnish all labor, materials, equipment, and incidentals required to modify existing equipment or install new equipment provided under this Contract.

D. The Contractor shall make all necessary mechanical changes to install new instrumentation equipment provided under this Contract. This work includes all fittings, fabrications. All work shall be done in a workmanlike manner in full accordance with all applicable codes and standards.

E. The Drawings indicate an overview of the requirements for the equipment specified. Contractor shall prepare detailed wiring interconnect diagrams.

F. All work shall be executed in full accordance with codes and local rulings. Should any work be performed contrary to said rulings, ordinances, and regulations, the Contractor shall bear full responsibility for such violations and assume all costs arising there from.

G. Field instruments requiring power supplies shall be provided with local electrical shut-offs and fuses.

H. Brackets and hangers required for equipment mounting shall be provided. They shall be installed in a workmanlike manner and not interfere with any other equipment.

I. The System Supplier shall investigate the lift station and include in the bid the actual routing of all conduits to reach their final location. If necessary, the System Supplier shall provide additional starter contacts or overloads as required for system operation. The System Supplier shall also investigate, and make any field modifications to existing lift station controls, enclosures, and panels to assure proper System operation.

J. The shield on each process instrumentation cable shall be continuous from source to destination and shall be grounded in the RTU or as directed by the Manufacturer of the instrumentation equipment but in no case shall more than one ground point be employed for each shield.

K. Lifting rings from cabinets/assemblies shall be removed after equipment installation. Hole plugs shall be provided for the holes of the same color as the cabinet.

L. The Contractor shall coordinate the installation, placing, and location of system components, their connections to the process equipment panels, cabinets and devices, subject to the Engineer of Record's approval. He shall be responsible to insure that all field wiring for power and signal circuits are correctly done in accordance with best industry practice and provide for all necessary system grounding to insure a satisfactory functioning installation.

M. General: Comply with NEC, NESC, local codes and rules and regulations of local agencies having jurisdiction. Size of conductors, circuit breakers, and protective devices shall meet all requirements of the NEC.

1. Determine rating and type of all electrical equipment furnished. Provide electrical equipment and conductors of correct size to serve equipment.

N. Grounding: A ground shall be established which will electrically connect the metal structural materials, equipment enclosures, conduits, outlet boxes, cabinets, etc., to obtain a potential common to all of these. The ground shall be properly bonded and sized in accordance with NEC. Solidly ground all non-current-conducting metal parts. A green insulated grounding conductor shall be carried with each circuit.

1. Provide a copper-clad steel ground rod connected to the equipment by bare copper conductor. Resistance to remote earth shall be 10 ohms or less before connection to the system.

3.03 SERVICES

The System Supplier shall provide the following services:

A. Process start-up services.

B. The services of factory personnel shall be provided to inspect the completed installation and make all adjustments necessary to place the system in trouble-free operation. This representative shall be capable of modifying the RTU software and City's HMI screens.

C. Provide a minimum of two (2) working days per lift station site (on-site) start-up assistance.

3.04 MTU PROGRAMMING SERVICES

The Contractor shall provide development, programming, startup, commissioning, and training services to incorporate any new lift station control systems into the City's existing MTU/SCADA software package to mimic monitoring and control functionality of existing lift station sites.

A. Configure historian to store lift station values on change of event with date/time stamp of when the event took place.

B. Configure historian to make data available to the HMI software system and to other trending and reporting software clients using OPC-HAD and ODBC/JDBC interfaces.

C. HMI Screens for lift station shall include:

1. Station Overview including Station Name and Station ID.
2. Summary alarms such as: level alarm, device faults, communication faults, power supply fault.
3. Communications statistics.
4. 3-phase voltage.
5. Wetwell Level.
6. Pump Status: Hand/Off/Auto/Fault.
7. Thermal overload alarm.
8. Seal fail alarm.
9. Delay fail alarm.
10. Critical pump station fault alarm.
11. Non-critical pump station alert.
12. Phase currents.
13. Phase voltages.
14. Pump station KW and KWH accumulator.
15. Pump under-current.
16. Pump over-current.
17. Power Phase fail.
18. Ground fault.
19. Detailed Pump Data.
20. Pump station flow.
21. Pump mode control: Hand/Off /Auto/Fault Reset.
22. Pump station configuration screen for manipulation of setpoints and pump profile settings.

D. Pump Station Operation Reports:

1. Daily hours run and starts report.
2. Daily exception reports.
3. Daily site report.
4. Daily fault report.

3.05 SYSTEM SERVICE CONTRACT

A. The supplier of the standby power system must provide a copy of and make available to the City the standard service contract which, at the City's option, may be accepted or refused. This contract will accompany documents, drawings, catalog cuts, specification sheets, and wiring or outline drawings, etc., submitted for approval to the Director of Environmental Services. The contract shall be for the complete services rendered over a period of one (1) year.

3.06 TESTING

A. System Test and Acceptance:

1. A formal system test shall be performed by the Supplier and witnessed by the Engineer of Record and/or City's representative after installation. The equipment shall include the entire Data Acquisition and Process Control System. The purpose of the factory test shall be to verify the functionability, performance, and stability of the hardware and software.

2. Implicit in the scheduling of the test is the assumption that the Supplier has determined through the tests and quality assurance programs that the equipment is ready for shipment. Supplier's internal test procedures for hardware shall be equal to or exceed the requirements set forth in ANSI Standard RP55.1, "Recommended Practice – Hardware Testing of Digital Process Computer," insofar as they apply.

3. Where hardware items are of standard manufacture and in current production, the Manufacturer shall certify that applicable tests have been performed and met, in accordance with said Standard and be prepared to supply copies of data to Engineer of Record upon request. Such statements shall accompany the equipment submittals called for in SUBMITTALS of this s Section. Any assemblage of devices together with operating programs shall be tested together as provided in this Section.

4. The various tests performed during the Engineer of Record and/or CITY witnessed site test shall be designed to demonstrate that hardware and software fulfill all requirements of the Specifications.

5. Tests to be performed shall include, but not be limited to, the following:

   a. Building and loading the System database.
   b. Conduct on-line modifications to the database.
   c. Demonstrate operability of the interfaces (hardware and software).
   d. Demonstrate operability of the data communication network.

e. Demonstrate all system software functions specified.
f. Verify the displays and interactive capabilities of the operator's console.
g. Simulate selected operating conditions to verify the performance of the monitoring and control functions.
h. Generate reports using test data.

6. During the test, the Engineer of Record and/or City's representative shall have unrestricted access to the system, and all faults identified during this period shall be corrected and retested before completion of factory test. All test data and procedures followed during testing shall be logged, and certified copies of all logs shall be provided to the Engineer of Record and City. The Supplier shall notify the Engineer of Record and City a minimum of 30 days in advance of the proposed starting data for the Engineer of Record and/or City-witnessed factory test. At the time of notification, the System Supplier shall submit a detailed test procedure for approval by the Engineer of Record.

7. After the equipment has been delivered and installed at the City's site, the services of a factory-trained, qualified service representative of the system manufacturer shall be provided to inspect and complete equipment installation to insure that it is installed in accordance with the manufacturer's recommendations. The service representative shall make all adjustments necessary to place the system in trouble-free operation and instruct the operating personnel in the proper care and operation of the equipment furnished.

B. Field Tests and Observation:

1. The Contractor shall furnish the services of the System Supplier's servicemen, all special tools, calibration equipment, and labor to perform the tests. Certified copies of the tests shall be furnished in duplicate to the Engineer of Record.

2. General: Do not enclose or cover any work until it has been observed, tested and accepted.

3. Provide all personnel, equipment and instruments required for observation and testing.

4. Show, by demonstration, that all circuits and devices are in operating condition.

5. Verify that electrical and mechanical facilities and supervisory control systems are compatible.

6. Verify that instrumentation and supervisory control systems are compatible.

7. Verify installation was in accordance with manufacturer's instructions.

8. The field inspector shall be a representative of the Manufacturer or Supplier. The representative shall have a minimum of 3 years experience on similar projects and shall be factory trained. The representative shall supervise installation, start-up, and make all predetermined settings and equipment adjustments to ensure proper operation of the system.

9. The manufacturer's representative shall certify the installation in writing.

10. The manufacturer's representative shall instruct the City's personnel in the proper operating and maintenance procedures.

END OF SECTION

SECTION 14
STANDBY POWER GENERATION - DIESEL

PART 1 GENERAL

1.01 SCOPE OF WORK

The Contractor shall furnish, install and test a complete, self contained, automatic standby power generating set complete with generator circuit breaker, control panel, annunciator, jacket water heaters, exhaust system, vibration isolators, batteries, battery charger, liquid level gauge, fuel tank and piping, automatic transfer switch, weatherproof enclosure, generator and fuel tank foundation. The Contractor shall furnish all labor, materials, equipment, and incidentals necessary for installing and testing a complete and operable system required by the City of Tavares as shown on the Drawings and specified in this Section.

A. The standby power generation facility shall be designed for automatic operation using an automatic transfer switch which, upon interruption of normal power, will send a signal to the standby generator to start and will disconnect the load from the normal power supply and connect the load to the standby generator.

B. The Contractor shall coordinate the work of this Section with others involved in the construction of the project.

C. These Specifications are intended to give a general description of what is required, but do not cover all details which will vary in accordance with the application. It is, however, intended to cover the furnishing, shop testing, delivery complete installation and field testing, of all materials, equipment and appurtenances for the complete units as specified in this Section, whether specifically mentioned in these specifications or not.

D. Contractor shall install and furnish all necessary equipment and auxiliaries whether specifically mentioned in these Specifications or not. This installation shall incorporate the highest standards for the type of service shown on the Drawings. The Contractor is responsible for field-testing of the entire installation and instruction of the regular operating personnel in the care, operation and maintenance of all equipment.

E. All standby generating sets to be used in the City of Tavares utility system, conform to these specifications, and shall be subject to approval by the Environmental Services Department.

1.02 SYSTEM CONFIGURATION (NOT USED)

1.03 RELATED WORK

A. The provisions of all other technical sections of the Specification are fully applicable to this Section as if incorporated in this Section.

1.04 PERMITS AND FEES

A. The Contractor shall obtain all necessary permits and inspections required for the work of this Section and shall pay all charges incidental to obtaining these permits and inspections.

B. The Contractor shall deliver to the City of Tavares all certificates of inspection issued by authorities having jurisdiction.

C. The Contractor shall complete and submit, on behalf of the City, Storage Tank Registration Form 17-761.900(2), where applicable, and shall provide at least 24 hours notice to the DEP before installation. The Contractor shall comply with all DEP requirements relative to submittal and shall respond to DEP comments as necessary to secure tank registration. The Contractor shall deliver the tank registration to the Engineer of Record.

1.05 REFERENCES

The work shall conform to the latest edition or revisions of the applicable provisions of the following standards except as modified in this Section:

A. AMERICAN SOCIETY FOR TESTING AND MATERIALS (ASTM)

A 53	Pipe, Steel, Black and Hot-Dipped Zinc-Coated, Welded and Seamless
B 16.3	Malleable Iron Screwed Fittings, 150 and 300 lb

B. FEDERAL SPECIFICATIONS AND STANDARDS (FES)

W-C-375B/GEN (1)	Circuit Breakers, Molded Case; Branch Circuit and Service
W-P-115C	Panel, Power Distribution

C. NATIONAL ELECTRICAL MANUFACTURERS ASSOCIATION (NEMA)

ICS-2	Automatic Transfer Switches

D. NATIONAL FIRE PROTECTION ASSOCIATION (NFPA)

30	Flammable and Combustible Liquids Code
37	Stationary Combustion Engines and Gas Turbines
110	Emergency and Standby Power Systems

E. UNDERWRITER'S LABORATORIES (UL)

142	Steel Above-ground Tanks for Flammable and Combustible Liquids
1008	Automatic Transfer Switches

1.06 SUBMITTALS

The Contractor shall submit a complete list of materials and equipment to be provided. Partial lists will not be acceptable.

A. The list shall include catalog numbers, cut sheets, diagrams, drawings, and other descriptive literature as related. A listing of standards and/or publications (i.e., ANSI, NEMA, NFPA, IEEE, etc.) which apply to the material submitted shall be included.

B. The basis of acceptance will be the manufacturer's published ratings. Manufacturer literature shall include an outline and assembly drawings, engineering data, and wiring diagrams. Guide for troubleshooting, description and recommended installation instruction, adjustment, and calibration instructions.

C. Ladder type schematic control diagrams and wiring diagrams for all equipment provided. Diagrams shall show and identify remote mounted devices including those supplied with the equipment and with/or as part of other equipment. Diagrams shall indicate color coding and labeling of wiring and include a complete symbol legend and abbreviation list as used for all devices of diagrams.

D. Submittal shall include prototype test certification and specification sheets showing all standard and optional accessories to be supplied, assembly diagram, schematic wiring diagrams, dimensional drawings, and interconnection diagrams identifying by terminal number each required for interconnection between the generator set, the transfer switch, and the switchgear panels included elsewhere in these specifications.

E. In the event that it is impossible to conform to certain details of the Specifications due to different manufacturing techniques, describe completely all nonconforming aspects.

F. The submittal data for each engine/generator set and weatherproof enclosure shall include, but not necessarily be limited to, the following:

1. Installation drawings showing plan and elevations of the complete generator unit foundation plan; exhaust silencer; starting battery; battery charger; weatherproof enclosure and base mounted fuel tank.

2. Engine Data:
   a. Manufacturer
   b. Model
   c. Number of cylinders
   d. RPM
   e. Bore x stroke
   f. BMEP at full rated load
   g. Piston speed, FPM
   h. Make and model and descriptive literature of electric governor (where required)
   i. Fuel consumption rate curves at various loads
   j. Engine continuous pump drive duty rating (without fan) HP
   k. Gross engine horsepower to produce generator standby rating (including fan and all parasitic loads) HP

3. Generator Data:
   a. Manufacture
   b. Model
   c. Rated KVA
   d. Rated SKVA
   e. Rated kw
   f. Voltage
   g. Temperature rise above 40 degree C ambient
      (1) Stator by thermometer
      (2) Field by resistance
      (3) Class of insulation
   h. Generator efficiency including excitation losses and at 80 percent
   i. Power factor.
      (1) Full load
      (2) 3/4 load
      (3) ½ load

4. Generator Unit Control Data:
   a. Actual electrical diagrams including schematic diagrams, and interconnection wiring diagrams for all equipment to be provided. Standard preprinted sheets are not acceptable.
   b. Legends for all devices on all diagrams.
   c. Sequence of operation explanations for all portions of all schematic wiring diagrams.

5. Engine/Generator Unit and Weatherproof Enclosure: Dimensional data shall be given for the Engine/Generator set and for the weatherproof enclosure.
   a. Weight of skid mounted unit
   b. Overall length
   c. Overall width
   d. Overall height
   e. Exhaust pipe size
   f. CFM of air required for combustion and ventilation
   g. Heat rejected to jacket water and lubricating oil BTU/hr.
   h. Heat rejected to room by engine and generator BTU/hr.
   i. Weatherproof enclosure details and certification of manufacturing method per specifications.
   j. Base fuel tank, venting, fuel connection points and fill cap location.
   k. Data on all miscellaneous items supplied.

6. Optional System Service Contract:
   a. Equipment Supplier Company
      Name
      Address
      City/State
      Phone Number
   b. Attach the number of copies required of System Service Contract to submittal.

7. Furnish the number of copies required of the manufacturer's certified shop test record of the complete engine driven generator unit.

G. Developer shall submit the following to the Director of Environmental Services:

1. Complete sets of installation drawings, schematics, and wiring diagrams which shall show details of installation and connections to the work of other Sections, including foundation drawings showing location and size of foundation bolts for the spring type vibration isolators and brochures covering each item of equipment.

2. The operating and maintenance data.

3. The equipment manufacturer's Certificate of Installation, Testing, and Instruction.

4. The written warranty as required in this Section.

1.07 OPERATION AND MAINTENANCE MANUAL

A. Before final acceptance of this project, the Contractor shall submit an operation and maintenance manual to the City. The manual shall include the manufacturer's literature as outlined in this specifications Section and drawings corrected according to submittals review comments and modifications, and lists of suppliers and/or service shops that can provide parts and accessories and equipment repair for the items of equipment listed in submittal article outlined in this Section. These lists shall include a contact name, telephone number, and address.

1.08 POSTED OPERATING INSTRUCTIONS

A. Operating instructions approved by the City shall be provided for each principal piece of equipment for the use of operation and maintenance personnel. The operating instructions shall include wiring and control diagrams showing the schematic layout of the system. Operating instructions shall be printed or engraved and shall be framed under glass or in approved laminated plastic and posted where directed by the City. Operating instructions shall be attached to or posted adjacent to each principal piece of equipment and shall include such instructions as start up, proper adjustment, operating, shutdown, safety precautions, procedure in the event of equipment failure, and any other necessary items of instruction as recommended by the manufacturer of the equipment.

1.09 DELIVERY, STORAGE, AND HANDLING

The Contractor shall deliver materials and equipment with the manufacturer's tags and labels and UL labels intact. Deliver packaged material in the manufacturer's original, unopened containers bearing manufacturer's name, brand, and UL label. Contractor shall store material and equipment in a dry, clean location to avoid damage. Remove items delivered in broken, damaged, rusted, or unlabeled condition from the project site immediately.

A. The Contractor shall provide suitable protection of materials and equipment from dust and moisture. The Contractor shall be responsible for the condition of materials and equipment until acceptance by the City.

B. All items shall be cleaned, touched up, or replaced as necessary to ensure first-class condition.

C. The engine generator set and associated equipment shall be shop primed and finish coated in accordance with the Manufacturer's standard practice before shipment. An adequate supply of touch-up paint shall be supplied by the manufacturer.

1.10 WARRANTY

All equipment and materials supplied shall be guaranteed against defective design, materials and workmanship under terms of the manufacturer and dealer's warranty, but in no event, shall it be for a period of less than five (5) years (comprehensive) from final acceptance by the City. Running hours shall not be a limiting factor for the system warranty either by the manufacturer or the supplying dealer.

A. The warranty shall cover replacement and/or repair including labor, travel time and miscellaneous expenses at no cost to the City for the full warranty period.

B. The responsibility for performance, warranty and parts and service to the generating system in its entirety shall be assumed solely by the generating set manufacturer/supplier and shall not be split among individual suppliers or components comprising the system.

C. The Contractor shall submit the manufacturer's written warranty with the shop drawings and include an approved warranty in the Operations and Maintenance Manual. Submittal data received without written warranties as specified will be rejected in their entirety.

PART 2 PRODUCTS

2.01 MANUFACTURER'S QUALIFICATIONS

A. The standby power generating set(s) shall be the product of a firm regularly engaged in the manufacture of generator sets and shall be a standard model in production at the manufacturer's place of business. The generating set(s) shall be assembled in the U.S. with 50% of the all major items of equipment such as the engine, generator, auxiliary equipment shall be manufactured in the U.S. by manufacturer currently engaged in the production of such equipment. The generating set shall be tested and shipped by an authorized distributor of the generating set manufacturer to establish a single source responsibility. The distributor shall be authorized to perform warranty work on all units and shall have factory-trained personnel in his direct employment. The distributor shall have a minimum of ten (10) years experience in the field of power generation.

B. The engine-generator set shall be a UL2200 listed standard product, as modified by these specifications, the unit to be furnished shall be of proven ability and shall be designed, constructed, and installed in accordance with best practices and methods. To qualify as a manufacturer, the engine must be the principal item manufactured and the completed engine generator set.

C. It is the intent of this specification to secure an emergency generator system that has been prototype tested, factory built, production tested, site tested and of the latest commercial design, together with all accessories necessary for a complete installation as shown on the plans and specifications in this Section. The equipment supplied and installed shall meet the requirements of the latest NEC,

along with all applicable local codes and regulations. All equipment shall be new, of current production of a national firm, which manufactures the engine/generator, and controls, transfer switch and switchgear, and assembles the emergency generator system as a matched unit so that there is one-source responsibility for warranty, parts, and service through a local representative with factory-trained service personal.

D. The unit must be of such physical dimensions as to make a good installation in the opinion of the Director of Environmental Services, in the space provided as indicated on the Drawings.

E. The unit shall be shipped to the jobsite by an authorized engine dealer having a parts and service facility within a 100 mile radius of the jobsite. In addition, and in order not to penalize the City for unnecessary or prolonged periods of time for service or repairs to the emergency system, the bidding generator set supplier must have no less than eighty percent (80%) of all engine replacement parts locally available at all times. Certified proof of this requirement shall be furnished to the City upon submittal of construction plans.

F. All materials and parts comprising the units shall be new and unused, of current manufacture, and of the highest grade, free from all defects or imperfections. Workmanship shall conform to the best modern practices. Only new and current models will be considered. The units offered under these Specifications shall be the product of a firm regularly engaged in the production of engine-generator equipment and shall meet the requirements of the Specifications set forth in this Section. Major exceptions to these Specifications will be considered sufficient cause for rejection of the machines.

G. The Engine/Generator Unit shall be as manufactured by Cummins Power Generation, Ingersoll Rand, or Tradewinds Power.

2.02 GENERAL REQUIREMENTS

A. All materials and equipment shall be new and unused, of current manufacture, and approved and labeled, where required, by UL.

B. The generating set shall consist of a diesel engine directly connected to a brushless alternating current generator with brushless exciter and integrally mounted generator circuit breaker and control panel. Automatic controls shall be furnished to start the unit upon signal from a remote start contact upon failure of the normal source of Power. The unit controls shall provide for automatic exercising on a weekly basis.

1. The installation shall meet all applicable requirements of the NFPA standards, as listed in this Specification, and state and local regulations.

C. The generating set shall be mounted, as shown on the Drawings, on a common structural steel, skid-type base designed to maintain proper alignment of components. Suitable spring type vibration isolators shall be furnished which, when installed between the engine generator skid and mounting surface, will permit only 5% of the unit's vibration to be transmitted. The vibration isolators shall be securely attached to the mounting surface.

1. The generator shall be set on an elevated pad of sufficient height (minimum 6 inches) above the surrounding floor or grade to allow the oil to be drained. A permanent, portable container shall be supplied with the generator set, to catch the oil being drained, and shall have a formed spout for pouring the oil into a waste oil collection tank or disposable container.

2.03 RATING REQUIREMENTS

A. The standby rating of the generator set shall not exceed the manufacturer's published prime rating by more than 10%. The gross engine horsepower required to produce the standby rating shall not exceed the manufacturer's published continuous duty rating by more than 150 percent. Continuous duty rating shall be as defined in BS649 or DIN6270 but in no case shall it exceed the manufacturer's published continuous duty rating for the engine as used in continuous rated pump drive applications. The gross engine horsepower required for the generator set standby rating described above shall include all parasitic demands such as generator inefficiencies, fuel pumps, water pumps, radiator fan (for fan cooled models) and all accessories necessary to the unit's proper operation while operating at rated load and at a rotative speed not to exceed 1800 rpm.

B. The diesel engine driven generator set shall be capable of producing the specified standby kW rating for continuous electrical service during interruption of the normal utility source and shall be certified to this effect by the manufacturer for the actual unit supplied.

C. The Diesel Engine/Generator Unit shall be rated for 277/480 volts, 3-Phase, 60 Hertz at 0.8 power factor with fan. The engine/generator set shall be sized to allow starting two (2) submersible pump motors across the line sequentially with 5 KVA of miscellaneous load on line. Manufacturer shall certify this in writing. Obtaining a motor starting KVA for each pump motor is the responsibility of the Design Engineer.

D. The instantaneous voltage dip shall not exceed 20 percent of rated voltage when full load, at rated power factor, is suddenly applied. Recovery of stable operation shall occur within 5 seconds. Steady state modulation shall not exceed +1/2 percent.

2.04 TESTING

A. To assure that the equipment has been designed and built to the highest reliability and quality standards, the manufacturer and local representative shall be responsible for three separate tests: design prototype tests, final production tests, and site tests.

1. Design Prototype Tests: Components of the emergency system such as the engine/generator set, transfer switch, and accessories shall not be subjected to prototype tests since the tests are potentially damaging. Rather, similar design prototypes and preproduction models, which will not be sold, shall have been used for the following tests. Prototype test programs shall include the requirements of NFPA 110 and the following:

    a. Maximum power (KW).
    b. Maximum motor starting (KVA) instantaneous voltage dip.
    c. Alternator temperature rise by embedded thermocouple and by resistance method per NEMA MG1-2240 and 16.40.
    d. Governor speed regulation under steady-state and transient conditions.
    e. Voltage regulation and generator transient response.
    f. Fuel consumption at 1/4, 1/2, 3/4, and full load.
    g. Harmonic analysis, voltage waveform deviation, and telephone influence factor.
        (1) Three-phase short circuit tests.
        (2) Alternator cooling air flow.
        (3) Tensional analysis testing to verify that the generator set is free of harmful tensional stresses.
        (4) Endurance testing.

2. Final Production Tests: Each generator set shall be tested under varying loads with guards and exhaust system in place. Tests shall include:

    a. Single-step load pickup.
    b. Transient and steady-state governing.
    c. Safety shutdown device testing.
    d. Voltage regulation.
    e. Rated power.
    f. Maximum power.
    g. Upon request, arrangements to either witness this test will be made, or a
    h. Certified test record will be sent before shipment.

2.05 SYSTEM COMPONENTS

A. ENGINE

1. The engine shall be full compression ignition, four cycles, single acting, solid injection engines, either vertical or "V" type. Speed shall not exceed 1800 revolutions per minute at normal full load operation. Multi block engines are not allowed. The engine governor shall be electronic type with a +/- 0.5 percent accuracy. The frequency at any constant load, including no load, shall remain within a steady-state band width of 0.25% of rated frequency. The governor shall not permit frequency modulation (defined as the number of times per second that the frequency varies from the average frequency in cyclic manner) to exceed one cycle per second. The governor shall be a mechanical or electronic type. Governor shall be by Cummins EFC ,Woodward, or Barber Coleman.

2. The engine shall be capable of satisfactory performance on No. 2 fuel oil (ASTM Designation D396). Diesel engines requiring a premium fuel will not be considered.

3. The engine shall be capable of operating at light loads for extended periods of time and shall provide a means to reduce carbonization. Periodic cleaning of exhaust ports shall not be required.

4. The engine shall be equipped with fuel filters, lube oil filters, intake air filters, lube oil cooler, fuel transfer pump, fuel priming pump, service meter, engine driven water pump, and unit mounted instruments. Unit mounted instruments shall include a fuel pressure gauge, water temperature gauge, and lubrication oil pressure gauge. The engine shall be provided with low oil pressure, high water temperature, and low coolant level and overspeed safety shutdowns of the manual reset type. Additional instruments and safety shutdowns shall be provided as noted in this Section.

5. Injection pumps and injection valves shall be a type not requiring adjustment in service and shall be of a design allowing quick replacement by ordinary mechanics without special diesel experience. The engines shall have an individual mechanical injection pump and injection valve for each cylinder, any one of which may be removed and replaced from parts stock. Fuel injection pumps shall be positive action, constant-stroke pumps, activated by a cam driven by gears from the engine crankshaft. Fuel lines between injection pumps and valves shall be of heavy seamless tubing.

6. The fuel system shall be equipped with fuel filters having replaceable elements. Filter elements shall be easily removable from their housing for

replacing without breaking any fuel line connections, or disturbing the fuel pump, or any other part of the engine. All fuel filters shall be conveniently located in one accessible housing, ahead of the injection pumps so that the fuel will have been thoroughly filtered before it reaches the pump. No screens or filters requiring cleaning or replacement shall be used in the injection pump or injection valve assemblies. The engines shall be equipped with a built-in gear-type, engine-driven fuel transfer pump, capable of supplying fuel through the filters to the injection pump at constant pressure.

7. In addition to the standard fuel filters provided by the engine manufacturer, there shall also be installed a primary fuel filter and a water separator in the fuel inlet line to the engine.

8. The engine shall be provided with removable wet-type cylinder liners of close grained alloy iron, heat treated for proper hardness as required for maximum liner life. The cylinder block shall be a one piece stress relieved gray iron casting.

9. The engine shall have a gear-type lubricating oil pump for supplying oil under pressure to main bearings, crank pin bearings, pistons, piston pins, timing gears, camshaft bearings, valve rocker mechanism and governor. Effective lubricating oil filters shall be provided and so located and connected that all oil being circulated is continuously filtered and cleaned. Filters shall be accessible, easily removed and cleaned and shall be equipped with a spring-loaded by-pass valve as an insurance against stopping of lubricating oil circulation in the event the filters become clogged. The engine shall have a suitable water cooled lubricating oil cooler.

10. The engine shall be provided with one or more engine mounted dry type air cleaners of sufficient capacity to protect effectively the working parts of the engine from dust and grit.

11. During each initial start of the engine, a system shall be provided to pre-lube at low idle speed. When the internal oil pressure reaches a predetermined safe value, the engine will then increase to generator set operation speed.

12. The generating set supplier shall furnish the Engineer of Record certified curves, certified by the engine generator manufacturer, that the engine and generator of model and series to be furnished will produce not less than kW rating as specified. Manufacturer literature indicating the BHP rating, overall generator efficiency, required auxiliaries, guarantee of fuel consumption, governor performance, and torsional vibration shall be submitted. Certified curves shall be furnished to the Engineer of Record before ordering the equipment.

13. Engine protective systems shall be provided to cause engine shut-down on low lubricating oil pressure, high water temperature, overcrank, and overspeed. The fuel supply to the engine shall automatically close on a fault condition. Pilot lights shall be provided to visually indicate the cause of engine shutdown. Engine protective systems shall be provided with pre-alarm for pending engine shut-down, for low lubricating oil pressure and high water temperature.

B. COOLING SYSTEM

1. The engine shall be equipped with a water cooling system adequate to maintain the engine at the recommended temperature level when the generating plant is delivering full-rated load in an ambient temperature of 122° F.

2. The engine shall be furnished with a unit mounted radiator-type cooling system having sufficient capacity for cooling the engine when the diesel generator set is delivering full rated load in an ambient temperature not to exceed 122 degrees F. The engine shall be provided with a thermostatic valve placed in the jacket water outlet between the engine and the cooling source. This valve shall maintain the proper jacket water temperature under all load conditions. Total air restriction from the radiator shall not exceed 0.5 inches of water at both inlet and outlet. A flexible connecting section shall be provided between the radiator and discharge louver frame. All cooling hoses shall be silicone. A coolant level sight glass shall be mounted on the top of the radiator tank assembly.

3. Closed circuit jacket water systems shall be treated with a rust inhibitor as recommended by the engine manufacturer.

4. Provide one (1) or two (2) unit mounted thermal circulation type water heaters incorporating a thermostatic switch shall be furnished to maintain engine jacket water at minimum of 70 degrees F. The heaters shall be 120 volt, single phase, 60 Hertz, size as required to achieve above noted ambient.

5. The expansion tank of the radiator shall be fitted with a low water level switch and wired into the safety shutdown system of the unit.

6. All fuel piping shall be installed in containment piping.

7. The cooling system shall be designed and engineered to be a functional unit capable of operating with a 50% ethylene glycol and 50% water

solution. The cooling system shall be winterized for operating in temperatures to 0° F.

C. DC ELECTRIC STARTING SYSTEM

1. Batteries - The generating set shall be equipped with a 24-volt DC electric starting system. Heavy-duty, lead-acid storage batteries rated no less than 225 ampere hours and have sufficient capacity for cranking the engine for at least 4 minutes at firing speed in an ambient temperature of 40° F shall be provided complete with battery rack , clamps and cables.

   a. The cranking period shall be controlled by a speed sensor which disengages the starting motor when the engine has started. Battery charging alternator or generator voltage may not be used for this signal. The cranking period shall be limited to 30 seconds. At the end of the cranking period the starter shall disengage and the overcrank alarm shall be activated.

   b. The starting system shall be designed for restarting in the event of a false engine start by permitting the engine to completely stop and then re-engage the starter.

2. Battery Tray - battery tray shall be provided for the batteries and shall conform to NEC 480-7(b). It shall be constructed of fiberglass and so treated as to be resistant to deterioration by battery electrolyte. Further, construction shall be such that any spillage or boil-over of battery electrolyte shall be contained within the tray to prevent a direct path to ground.

3. Battery Charger - A current-limiting, automatic 24 volt DC charger shall be furnished to automatically recharge batteries. Charger shall float at 2.17 volts per cell and equalize at 2.33 volts per cell. It shall include overload protection, silicon diode full wave rectifiers, voltage surge suppressor, DC ammeter, DC voltmeter, and fused AC input. AC input voltage shall be 120 volts, single phase. Amperage output shall be no less than ten (10) amperes. Charger shall be wall mounting type in NEMA 1 enclosure, and U.L. listed as an industrial control panel. The charger shall be as manufactured by LaMarche per NFPA 110 and U.L. 508. The charger shall be mounted and wired within the enclosure for the generator set by enclosure manufacturer.

D. GENERATOR

1. The generator shall be a type specially designed for induction motor starting. It shall be capable with its prime mover of starting the connected

loads and running continuously for the duration of a normal power outage. The voltage drop under starting conditions specified shall be such as to maintain, without impairment, all plant operation functions.

2. The generator and exciter shall be drip proof, with split sleeve, or ball race bearings. A shaft-mounted brushless exciter shall be a part of the assembly. The stator core shall be built up of high grade silicon steel laminations precision punched, and individually insulated. Armature lamination followers and frame ribs shall be welded integral with the frames for support of the stator core. A directional blower shall be mounted on the unit to draw cooling air from the exciter and over the rotor poles and through louvered openings on the opposite end.

3. The exciter shall be a fast response type, with a rotating 3-phase full-wave bridge. The exciter shall have a low time constant and large capacity to minimize voltage transients under severe load changes.

4. Generator stator and exciter stator windings shall be a full Class H insulated system vacuum impregnated with epoxy resin which after curing shall have additional treatment of epoxy for resistance to an environment of moisture and salt air. Generator coils shall be random or machine wound, and precision made, with turn-to-turn and ground insulation of glass yard and mica materials. The average di-electric strength for the form wound coils of the ground and end turn insulation shall not be less than 400 volts per mil. Spacers shall be tightly secured between end turns, and the end turn assembly securely lashed to the support rings.

5. Generator rotor poles shall be built up of individually insulated silicon steel punching. Poles shall be wound and bonded with high strength epoxy resin. Cage connections to the amortisseur rings shall be braze for strong construction and permanent electrical characteristics. Each pole shall be securely bolted to the rotor shaft with bolts sized for the centrifugal forces on the rotor. Generator windings shall be braced for full line to ground fault currents, with solidly grounded neutral system.

6. Accessories and Attachments

   a. Low Voltage Terminal Boxes: The generator shall have separate AC and DC low voltage terminal boxes with suitably numbered terminal strip for required connections.

   b. All required PTs, CTs and protective relays shall be supplied by the engine-generator manufacturer as required.

c. Space Heaters: Space heaters shall be installed on the generator frame to maintain temperature of the entire generator above the dew point while not in use. Power supply shall be 120 volts single phase. Heaters will be automatically disconnected when engine starts. The magnetic starter for the heaters shall be mounted in the terminal box. Furnishing and installation of control and starter to be by engine/generator supplier.

7. Generator Associated Controls:

a. Voltage Regulator:

(1) The generator manufacturer shall furnish a hermetically sealed, silicon controlled rectifier type voltage regulator employing a zener reference with a +1 percent regulation for the generator. The regulator shall include 3-phase voltage sensing, automatic short circuit protection and shall include automatic under frequency protection to allow the generator to operate at no load at less than synchronous speed for engine start-up and shutdown procedures. Switches and/or fuses shall not be used to provide this protection. An over-voltage sensing module with manual reset shall be furnished with the regulator. A volt per Hz., sensing module shall be provided as part of the regulation system.

(2) A voltage adjustment rheostat for 5 percent voltage adjustment on the unit shall be provided.

(3) High voltage step-down potential transformers shall be provided for the voltage regulator power input and sensing circuits if required.

b. Sustained Short Circuit: A permanent magnetic exciter shall be provided on the unit for sustaining a current of 300 percent during a short circuit, permitting the generator breaker to trip on overload. To prevent possible overheating of the armature windings, appropriate relaying shall be supplied to limit the fault to ten seconds. All current transformers required shall be supplied by the switchgear manufacturer.

E. CONTROLS

1. Engine/Generator Control Panel

a. The generator set shall be provided with a microprocessor-based control system that is designed to provide automatic starting, monitoring, and control functions for the generator set. The control system shall also be designed to allow local monitoring and control of the generator set, and remote monitoring and control as described in this specification. The control shall be mounted on the generator set. The control shall be vibration isolated and prototype tested to verify the durability of all components in the system under the vibration conditions encountered. The generator set mounted control shall include the following features and functions:

(1) Control Switches

b. Mode Select Switch. The mode select switch shall initiate the following control modes. When in the RUN or Manual position the generator set shall start, and accelerate to rated speed and voltage as directed by the operator. In the OFF position the generator set shall immediately stop, bypassing all time delays. In the AUTO position the generator set shall be ready to accept a signal from a remote device to start and accelerate to rated speed and voltage.

c. EMERGENCY STOP switch. Switch shall be Red "mushroom-head" push-button Depressing the emergency stop switch shall cause the generator set to immediately shut down, and be locked out from automatic restarting.

d. RESET switch. The RESET switch shall be used to clear a fault and allow restarting the generator set after it has shut down for any fault condition.

(1) PANEL LAMP switch. Depressing the panel lamp switch shall cause the entire panel to be lighted with DC control power. The panel lamps shall automatically be switched off 10 minutes after the switch is depressed, or after the switch is depressed a second time.

2. Generator Set AC Output Metering. The generator set shall be provided with a metering set including the following features and functions:

a. Digital metering set, 0.5% accuracy, to indicate generator RMS voltage and current, frequency, output current, output KW, KW-hours, and power factor. Generator output voltage shall be available in line-to-line and line-to-neutral voltages, and shall display all three-phase voltages (line to neutral or line to line) simultaneously.

b. The control system shall monitor the total load on the generator set, and maintain data logs of total operating hours at specific load levels ranging from 0 to 110% of rated load, in 10% increments. The control shall display hours of operation at less than 30% load and total hours of operation at more than 90% of rated load.

c. The control system shall log total number of operating hours, total kWH, and total control on hours, as well as total values since reset.

3. Generator Set Alarm and Status Display.

a. The generator set control shall include LED alarm and status indication lamps. The lamps shall be high-intensity LED type. The lamp condition shall be clearly apparent under bright room lighting conditions. Functions indicated by the lamps shall include:

(1) The control shall include five configurable alarm-indicating lamps. The lamps shall be field adjustable for function, color, and control action (status, warning, or shutdown).

(2) The control shall include green lamps to indicate that the generator set is running at rated frequency and voltage, and that a remote start signal has been received at the generator set. The running signal shall be based on actual sensed voltage and frequency on the output terminals of the generator set.

(3) The control shall include a flashing red lamp to indicate that the control is not in automatic state, and red common shutdown lamp.

(4) The control shall include an amber common warning indication lamp.

b. The generator set control shall indicate the existence of the following alarm and shutdown conditions on an alphanumeric digital display panel:

(1) low oil pressure (alarm)
(2) low oil pressure (shutdown)
(3) oil pressure sender failure (alarm)
(4) low coolant temperature (alarm)
(5) high coolant temperature (alarm)
(6) high coolant temperature (shutdown)
(7) high oil temperature (warning)
(8) engine temperature sender failure (alarm)
(9) low coolant level (alarm or shutdown--selectable)
(10) fail to crank (shutdown)
(11) fail to start/overcrank (shutdown)
(12) overspeed (shutdown)
(13) low DC voltage (alarm)
(14) high DC voltage (alarm)
(15) weak battery (alarm)
(16) low fuel-daytank (alarm)
(17) high AC voltage (shutdown)
(18) low AC voltage (shutdown)
(19) under frequency (shutdown)
(20) over current (warning)
(21) over current (shutdown)
(22) short circuit (shutdown)
(23) over load (alarm)
(24) emergency stop (shutdown)

c. Provisions shall be made for indication of four customer-specified alarm or shutdown conditions. Labeling of the customer-specified alarm or shutdown conditions shall be of the same type and quality as the above specified conditions. The non-automatic indicating lamp shall be red, and shall flash to indicate that the generator set is not able to automatically respond to a command to start from a remote location.

d. The control shutdown fault conditions shall be configurable for fault bypass.

4. Engine Status Monitoring

a. The following information shall be available from a digital status panel on the generator set control:

(1) engine oil pressure (psi or kPA)
(2) engine coolant temperature (degrees F or C)
(3) engine oil temperature (degrees F or C)
(4) engine speed (rpm)
(5) number of hours of operation (hours)
(6) number of start attempts
(7) battery voltage (DC volts)
(8) The control system shall also incorporate a data logging and display provision to allow logging of the last 10 warning or shutdown indications on the generator set, as well as total time of operation at various loads, as a percent of the standby rating of the generator set.

5. Engine Control Functions.

a. The control system provided shall include a cycle cranking system, which allows for user selected crank time, rest time, and # of cycles. Initial settings shall be for 3 cranking periods of 15 seconds each, with 15- second rest period between cranking periods.

b. The control system shall include an idle mode control, which allows the engine to run in idle mode in the RUN position only. In this mode, the alternator excitation system shall be disabled.

6. The control system shall include an engine governor control, which functions to provide steady state frequency regulation as noted elsewhere in this specification. The governor control shall include adjustments for gain, damping, and a ramping function to control engine speed and limit exhaust smoke while the unit is starting.

a. The control system shall include time delay start (adjustable from 0-300 seconds) and time delay stop (adjustable from 0-600 seconds) functions.

b. The control system shall include sender failure monitoring logic for speed sensing, oil pressure, and engine temperature which is capable of discriminating between failed sender or wiring components, and an actual failure conditions.

7. Alternator Control Functions:

a. The generator set shall include an automatic digital voltage regulation system that is matched and prototype tested by the engine manufacturer with the governing system provided. It shall be immune from misoperation due to load-induced voltage

waveform distortion and provide a pulse width modulated output to the alternator exciter. The voltage regulation system shall be equipped with three-phase RMS sensing and shall control buildup of AC generator voltage to provide a linear rise and limit overshoot. The system shall include a torque-matching characteristic, which shall reduce output voltage in proportion to frequency below an adjustable frequency threshold. Torque matching characteristic shall be adjustable for roll-off frequency and rate, and be capable of being curve-matched to the engine torque curve with adjustments in the field. The voltage regulator shall include adjustments for gain, damping, and frequency roll-off. Adjustments shall be broad range, and made via digital raise-lower switches, with an alphanumeric LED readout to indicate setting level. Controls shall be provided to monitor the output current of the generator set and initiate an alarm (over current warning) when load current exceeds 110% of the rated current of the generator set on any phase for more than 60 seconds. The controls shall shut down and lock out the generator set when output current level approaches the thermal damage point of the alternator (over current shutdown). The protective functions provided shall be in compliance to the requirements of NFPA70 article 445.

b. Controls shall be provided to individually monitor all three phases of the output current for short circuit conditions. The control/protection system shall monitor the current level and voltage. The controls shall shut down and lock out the generator set when output current level approaches the thermal damage point of the alternator (short circuit shutdown). The protective functions provided shall be in compliance to the requirements of NFPA70 article 445.

c. Controls shall be provided to monitor the KW load on the generator set, and initiate an alarm condition (over load) when total load on the generator set exceeds the generator set rating for in excess of 5 seconds. Controls shall include a load shed control, to operate a set of dry contacts (for use in shedding customer load devices) when the generator set is overloaded.

8. An AC over/under voltage monitoring system that responds only to true RMS voltage conditions shall be provided. The system shall initiate shutdown of the generator set when alternator output voltage exceeds 110% of the operator-set voltage level for more than 10 seconds, or with no intentional delay when voltage exceeds 130%. Under voltage shutdown shall occur when the output voltage of the alternator is less than 85% for more than 10 seconds.

9. Other Control Functions

a. The generator set shall be provided with a network communication module to allow LonMark compliant communication with the generator set control by remote devices. The control shall communicate all engine and alternator data, and allow starting and stopping of the generator set via the network.

b. A battery monitoring system shall be provided which initiates alarms when the DC control and starting voltage is less than 25 VDC or more than 32 VDC. During engine cranking (starter engaged), the low voltage limit shall be disabled, and DC voltage shall be monitored as load is applied to the battery, to detect impending battery failure or deteriorated battery condition.

10. Control Interfaces for Remote Monitoring:

a. The control system shall provide four programmable output relays. These relay outputs shall be configurable for any alarm, shutdown, or status condition monitored by the control. The relays shall be configured to indicate:

- generator set operating at rated voltage and frequency,
- common warning,
- common shutdown,
- Load shed command.

b. A fused 10 amp switched 24 VDC power supply circuit shall be provided for customer use. DC power shall be available from this circuit whenever the generator set is running.

c. A fused 10 amp 24 VDC power supply circuit shall be provided for customer use. DC power shall be available from this circuit at all times from the engine starting/control batteries.

d. The control shall be provided with a direct serial communication link for the LonWorks communication network interface as described elsewhere in this specification and shown on the drawings.

F. GENERATOR CIRCUIT BREAKER

1. Type - Main line, molded case circuit breaker mounted upon and sized to the output of the generator shall be installed as a load circuit interrupting and protection device. It shall operate both manually for normal switching functions and automatically during overload and short circuit conditions.

The breaker shall include ground fault sensing that will trip the breaker on ground fault conditions.

2. The trip unit for each pole shall have elements providing inverse time delay during overload conditions and instantaneous magnetic tripping for short circuit protection. The circuit breaker shall meet standards established by Underwriters Laboratories, National Electric Manufacturers Association, and National Electrical Code.

3. Generator exciter field circuit breakers do not meet the above electrical standards and are unacceptable for line protection.

4. Circuit breaker shall have battery voltage operated shunt trip wired to safety shutdowns to open the breaker in the event of engine failure.

5. Each circuit breaker shall be equipped with an auxiliary contact for remote annunciation of breaker position.

6. The rating of each circuit breaker shall allow the starting of full generator SKVA.

7. The circuit breaker enclosure, together with all specified circuit breakers, shall be designed for the specific generator set specified and be equipped with an isolated neutral conductor bus, rear copper stabs, or load cable lugs and finish painted to match the generator set.

G. EXHAUST AND MUFFLER SYSTEM

1. The Contractor shall furnish and install, according to manufacturer’s recommendations, silencers, wall thimbles, stainless steel flexible corrugated exhaust connections, flanges, hangers and supports, pipe and fittings, and insulation as specified in this Section or as indicated on the Drawings to provide a complete and operable exhaust system.

   a. Exhaust Silencer - A critical type, side inlet, end outlet, Nelson, Maxim M-51, or Silex JB silencer and a flexible stainless steel exhaust fitting properly sized shall be furnished and installed according to the manufacturer's recommendation. Mounting shall be provided by the Contractor as required. The silencer shall be mounted so that its weight is not supported by the engine nor will exhaust system growth due to thermal expansion be imposed on the engine. Exhaust pipe size shall be sufficient to ensure that exhaust back pressure does not exceed the maximum limitations specified by the engine manufacturer. So called "spiral" or truck mufflers are disallowed and will not be considered as equal to the industrial quality silencers specified above.

b. The silencer shall be fitted with a tail pipe extension terminating at a 45° angle to prevent the entrance of rainwater. It shall also be fitted with an expanded metal bird screen.

c. Rain Skirt - At the point where the exhaust pipe flexible tubing penetrates the roof of the enclosure, a suitable "rain skirt" and collar shall be provided by the manufacturer. It shall be designed to prevent the entrance of rain and allow for expansion and vibration of the exhaust piping without chafing or stress to the exhaust system. This detail must appear on the drawings submitted for approval.

H. FUEL SYSTEM

1. The Contractor shall provide a diesel fuel system consisting of sub-base fuel storage piping, fuel oil level gauges and miscellaneous appurtenances necessary for complete and working installation as specified in this Section.

2. Base and Mounting - The generator set and enclosure shall be mounted and shipped to the jobsite on the formed steel sub-base provided by generator supplier. Provisions for crane unloading of the complete package shall be designed into the base of the unit.

3. The fuel tank base dimensions shall be full size of the generator base and be formed from steel of a minimum metal thickness of 0.25-inch (1/4-inch) and shall be fitted with low fuel level and inner wall leak alarm contact for local and remote annunciation. The fuel tank height shall not exceed 30 inches.

4. Filter/Separator-In addition to the standard fuel filters provided by the engine manufacturer, there shall also be installed a primary fuel filter/water separator in the fuel inlet line to the engine. The filter shall be a Fleetguard, Racor, simplex or duplex Model 1000, as required for proper fuel flow. It shall be supplied and installed by the enclosure supplier.

5. The base and enclosure assembly allow room within the package to mount and maintain the specified battery charger, engine starting batteries, racks, and cables, main line circuit breaker, and engine-generator control panel, and other items as specified or as shown on the drawings.

6. The weight of the entire unit consisting of generator set, base, enclosure, and all other specified items including all liquids (i.e., fuel oil, lube oil, and cooling water) shall be calculated by the manufacturer. The base of the unit shall be designed and manufactured as a heavy duty, formed steel construction with four (4) point lifting provision to support the calculated weight. Details and manufacturer's certification of the base construction

shall be included with the drawings submitted for approval as well as all weight calculations.

7. Base Tank (UL142) - The unit shall be equipped with a double wall in-base fuel tank and shall be supplied with a lockable, exterior located fill cap. The capacity (gallon) of the base tank shall permit operation of the generator for 3 days at 75 percent load. All necessary fuel and vent lines for proper engine performance shall be provided as well as a means to readily detect the fuel level in the tank without the use of a measuring stick.

8. Platforms and Stairs - Working platforms and stairs complete with hand railings shall be provided if necessary to allow for safe maintenance of the generator set without the use of ladders. Working platforms and stairs shall be made of aluminum, and shall be manufactured to be non-slip. Working platforms, stairs and hand railings shall be in compliance with OSHA standards

I. SOUND ATTENUATED WEATHERPROOF ENCLOSURE

1. The intent of this Specification is to provide the City with a weatherproof sound attenuated generator set enclosure complete in every detail and requiring no additional in-field modifications or assembly, except where specifically allowed by these Specifications. The enclosure is to be accurately dimensioned so as to be in compliance with the National Electrical Code (NEC), and the National Fire Protection Association (NFPA) for clearance of all specified items included therein, and all applicable fire codes for a structure and application of this type.

2. Construction drawings, engineering blueprints, or other bid documents accompanying these Specifications which show switchgear, transfer switch(es), motor controllers(s), and/or other service or distribution equipment within the generator set enclosure must be considered complimentary to and not in lieu of this written Specification. Drawings submitted for approval shall reflect this fact clearly and any contradiction or omission shall be brought to the attention of the Director of Environmental Services.

3. The enclosure shall be of sheet metal construction as designed and manufactured by the generator supplier. The design and construction shall be modular in that the side panels, doors, and louvers shall not exceed 36 inches in width and shall be a minimum thickness of 14 gauges for all component parts. The roof of the enclosure shall meet or exceed the minimum gauge requirements specified but, in addition, shall be strengthened in such a manner as to support the largest commercially available exhaust silencer recommended by the manufacturer for this application.

a. Construction - All sheet metal used in the construction shall be primed and painted. This sequence of metal forming, and final assembly of the enclosure must be noted on the drawings submitted for approval and a factory certification of this manufacturing process shall accompany the "as-built" drawings provided to the Owner. Walls and roof shall be constructed of 14 gauge steel.

b. Attenuation – The enclosure will be designed to provide a noise emission rating of 76 decibels at a distance of 23 feet from any point on the generator. Utilize plenum if necessary to meet this requirement.

c. Doors - All doors on the enclosure shall be strategically located in areas as to allow ease of maintenance on the generator set and allow good access to and visibility of instruments, controls, engine gauges, etc. The doors shall be fitted with bolt-on, stainless steel hinges constructed with stainless steel hinge pins of a diameter not less than 0.25-inch (1/4- inch). Each door shall be fitted with flush-mounted, adjustable, key-lock latches. Enclosure shall be rated for 110 MPH constant wind. Certified calculations shall be provided to the Engineer of Record.

d. Louvers - All louvers fixed and drainable with bird screen and shall be designed to the total engine/generator cooling air requirements used in this application. Maximum air velocity shall be 700 CFM. Manufacturer shall submit air flow calculations to the Engineer of Record for review.

e. Components All components of the enclosure shall be assembled utilizing 0.375-inch minimum stainless steel bolts, nuts and lock washers. In addition, watertight neoprene flat washers shall be used on all roof bolts.

f. The manufacturer of the enclosure shall provide mounting brackets for the exhaust silencer specified. In addition, a tail pipe extension terminating in a horizontal plane and cut at a 45- degree angle to prevent the stainless steel, seamless flexible exhaust tube and all necessary bolts, flanges, and gaskets to mate with the engine and the exhaust silencer shall be provided. The length of the flexible tubing shall be such that additional solid metal nipples or sections shall not be required to be provided as spacers between the engine exhaust port and the exhaust silencer.

g. All wiring to the switchgear from the generator shall be in conduits made from Rigid Metal, IMC, or liquid-tight material specifically

manufactured for electrical use. All connections at the generator set shall be flexible, and all shall be provided and installed by enclosure manufacturer.

h. Oil and Water Drains - All necessary fittings, hoses, shut-off valves, etc., shall be provided by the manufacturer of the enclosure to facilitate lube oil and water drain at the exterior of the enclosure. In addition engines equipped with crank-case breather tubes shall have this tube terminate at the exterior of the enclosure directly under the radiator air discharge louver.

i. Enclosure - The enclosure shall be skintight construction to meet specific project requirements.

j. Under no circumstances shall the floor area or any of its parts be considered for cooling air intake or discharge requirements of the generator set or its associated equipment, nor shall its properties as a "heat-sink" or heat dissipating medium be utilized in any manner whatsoever in this application.

k. All items specified in this Section shall be supplied and rewired and/or pre installed including, but not limited to the following:

l. Rain dress for exhaust pipe and tail pipe extension. Rain dress shall prevent the entrance of rain and allow for the expansion and vibration of the exhaust piping without stress to the exhaust system. Rain dress shall be stainless steel and provided by the enclosure supplier.

m. Coordination between Contractor and Supplier is mandatory and the equipment Supplier's instructions will be adhered to without exception.

J. SPARE PARTS

1. The MANUFACTURER shall furnish two (2) complete spare replacement sets of all filter elements required for the generator unit.

2.06 AUTOMATIC TRANSFER SWITCH

A. The rating of the automatic transfer switch (ATS) shall be sized to the station main breaker rating. The ATS shall be service entrance rated if required by the NEC.

B. The automatic transfer switch shall be mechanically held on both the emergency and the normal side, and rated for continuous duty in an unventilated enclosure.

C. The switch shall be solid-state, electronically controlled, double throw, actuated by a single electrical operator momentarily energized. The transfer switch shall be capable of transferring successfully in either direction. Power for the transfer shall be derived from the supply being transferred to.

D. The normal and standby contacts shall be positively interlocked mechanically (mounted on a common steel bar) and electrically to prevent simultaneous closing. Contacts shall be mechanically locked in position in both the normal and emergency positions without the use of hooks, latches, magnets, or springs and shall be silver-tungsten alloy protected by arcing contacts, with magnetic blowouts on each pole. Main and arcing contacts shall be fully visible without major disassembly to facilitate inspection and maintenance. All maintenance required shall be accomplished by front access only without major disassembly. Switch shall be designed for inductive loads and shall be equipped with magnetic blowouts and arc barriers on all poles.

E. The transfer switch shall be equipped with a manual operator to prevent injury to the operating personnel if the electrical operator should suddenly become energized during manual transfer and to enable one (1) hand manual operation which, when utilized, can provide a neutral position for servicing operations. The manual operator shall provide the same contact-to-contact transfer speed as the electrical operator to prevent flashover when switching the main contacts.

F. The automatic transfer switch shall be a single motor operated circuit breaker type with interpole barriers and arc chutes. So-called linear actuated or solenoid operated switches are approved only when manufactured by the Generator manufacturer. All elements of the drive system must be replaceable from the front of the switch, and the power switching devices must be replaceable without removal of the connecting cables.

G. Accessories - The automatic load transfer switch specified shall include the following accessories:

1. Full three phase protection. Solid-state phase monitor shall be field adjustable, close differential type, with 85-100% pick-up and 75-98% drop-out. A single adjustment shall set all phases.

2. Solid-state voltage and frequency monitor on generator output to prevent transfer before proper output parameters, adjustable 85-100% of generator rated voltage and frequency, with adjustable drop-out of 75-85% of pick-up setting.

3. Adjustable, solid-state, from 0.5 to 6 seconds time delay on engine starting to override momentary outages and nuisance voltage dips.

4. Adjustable, solid-state, from 2 to 30 minutes time delay on retransfer of load to normal.

5. Adjustable, solid-state, from 2 to 30 minutes cool-down timer wherein the generator set runs unloaded after retransfer to normal source.

6. Motor load decay time delay, pneumatic type, adjustable for 1.5 to 15 seconds and operating on transfer to either source.

7. Adjustable, solid-state, from 0.5 seconds to 5 minutes time delay on transfer to emergency source after verification of emergency source voltage and frequency.

8. Test switch to simulate normal power failure, heavy duty, oil tight, pushbutton type with momentary contacts and override circuitry to revert to normal power if emergency source should fail during test.

9. Motor circuit disconnect switch.

10. Three (3) pilot lights, to indicate the normal and emergency position of the transfer switch, and mode selector switch in "off" position.

11. Engine starting contacts to provide for generator starting from each unit independent of the other.

12. One (1) auxiliary S.P.D.T. contact on emergency breaker and one (1) S.P.D.T. auxiliary contact on normal breaker.

13. Plant exerciser to start and run the generator set with or without load (in-field switchable) each 168 hours for a 30 minute interval.

14. Four (4) position mode selector switches marked "test", "auto", "off", and "engine start".

15. Equipment grounding lug.

16. Cable connection lugs, cu/al type for all conductors.

17. The ATS shall be either solid neutral or switched neutral design as required by the City.

H. The transfer switch shall be listed under U.L. 1008, in NEMA 4X stainless steel enclosure, as manufactured by Cummins, Russelectric, or Lakeshore Electric.

PART 3 EXECUTION

3.01 LAYOUT OF WORK

A. The Contractor shall lay out the work and shall be responsible for all necessary lines, levels, elevations, and measurements. The Drawings indicate the extent and general arrangement of the components. The Contractor shall become familiar with work of other trades engaged in the construction. Exact routing of raceways, piping and locations of equipment may be governed by structural conditions and obstructions. The Contractor shall coordinate with the equipment shop drawings for locations of equipment to be connected as furnished by others. This is not to be construed to permit redesigning systems.

3.02 INSTALLATION

Comply with Referenced Standards, National Electrical Code (NEC), National Electrical Safety Code, local codes and rules and regulations of local agencies having jurisdiction. The size of conductors, circuit breakers, motor controllers and protective devices indicated or specified shall meet all requirements of the NEC.

A. A standby generator shall be installed on, and secured to a reinforced concrete pad as indicated on the Drawings or as recommended by the manufacturer per City's approval. The concrete pad shall be designed to accommodate the standby generator, enclosure, and housed equipment.

B. Fuel storage tank shall be installed on, and secured to, a reinforced concrete pad as indicated on the Drawings or as recommended by the manufacturer per City's approval.

3.03 SYSTEM OPERATION

A. Automatic Operation

The generating set shall automatically start upon a signal from the automatic transfer switch and after the transfer switch has transferred back to normal, the generating plant shall be allowed to operate at no load for an adjustable period of 2 to 30 minutes to allow it to cool before shutdown.

1. The generating plant shall start if any phase of the normal source drops below an adjustable set point of 75% to 98% of rated system voltage, after an adjustable time delay of 0 to 6 seconds, to allow for momentary dips. The transfer switch shall transfer to the standby source after an adjustable time delay 0 seconds to 5 minutes when the frequency and voltage output have reached an adjustable set point of 85% to 100% of rating.

2. Upon restoration of frequency and voltage to an adjustable set point on all phases of the normal power ratings, the transfer switch shall retransfer to

the normal power source after an adjustable time delay period of 0 to 30 minutes. If the standby power source should fail during the time delay period, the time delay shall be by-passed and the switch shall return immediately to the normal source.

3. There shall be a delay in transfer to stand-by power or retransfer to commercial power (delayed up to 10 seconds) to prevent excessive switching transients due to non-synchronization of two power supplies. This may be accomplished by the use of an in-phase monitor, load disconnect/reset controls, neutral position delay or other methods with previous approval. If the load disconnect/reset method is chosen, coordinate and provide required conduit and wire between transfer switch and motor starters.

B. Emergency Stop

An emergency stop pushbutton shall be installed on the exterior of the generator room or on the weatherproof enclosure. When the pushbutton is activated, the engine-generator set shall be shut down.

1. The pushbutton shall be red in color, 2-1/2 inches minimum diameter, and shall have cover or release device to prevent accidental operation.

2. An engraved nameplate with the words *Generator Emergency Stop*, in ½-inch-high letters, shall be mounted on the wall above the pushbutton.

3.04 SERVICE

A. Furnish the services of a competent and experienced manufacturer's field service technician who has complete knowledge of proper operation and maintenance of the equipment for a period of not less than two (2) days in two separate visits to inspect the installed equipment, supervise the initial test run, and to provide instructions to the plant personnel. The first visit will be for checking and inspecting the equipment after it is installed.

B. At least one (1) of the two (2) days shall be allocated solely to the instruction of plant personnel in operation and maintenance of the equipment. This instruction period shall be scheduled at least ten days in advance with the City and shall take place during plant start-up and acceptance by the City.

C. Three final copies of operation and maintenance manuals specified must be delivered to the Owner before scheduling the instruction period.

3.05 SYSTEM SERVICE CONTRACT

A. The supplier of the standby power system must provide a copy of and make available to the City the standard service contract which, at the City's option, may be accepted or refused. This contract will accompany documents, drawings, catalog cuts, specification sheets, and wiring or outline drawings, etc., submitted for approval to the Director of Environmental Services. The contract shall be for the complete services rendered over a period of one (1) year.

3.06 TESTING

A. The engine-generator set shall be given the manufacturer's standard factory load test before shipment.

B. Before final acceptance of the generator set, all equipment furnished under this Section shall be field tested per NFPA 110 to show it is free of any defects and the generator set can operate satisfactorily under full load test using resistance type load banks (brine tanks not acceptable). Test shall be for four (4) continuous hours.

1. Load bank testing shall be done in the presence of the Owner's appointed representative after the unit is permanently installed in accordance with Drawings and Specifications.

2. Before acceptance, any defects which become evident during this test shall be corrected at no expense to the Owner.

C. An all-in-place static alignment check of all rotating components shall be made before first start-up, after unit is secured in place and all final connections are made.

D. The services of a factory-trained service engineer who is specifically trained on the type of equipment in this Section specified shall be provided to fully inspect the installation, calibrate the equipment and supervise testing.

E. Upon completion of testing, the services of the service engineer shall be provided for instruction of the Owner's operating and maintenance personnel. The instructions shall include operating and maintenance procedures specifically written for the equipment installed and not generally written to cover all options available. Once completely satisfied with the instructions, the Owner will consider the services of the service engineer completed.

F. The transfer switch shall be operationally tested as part of the complete system to verify satisfactory operation under the worse case conditions to be provided by the electrical system.

G. After testing is complete, the Contractor shall fill all fuel storage tanks to City's desired capacity with #2 diesel fuel.

1. Site Tests: An installation check, start-up and building load test shall be performed by the manufacturer's local representative. The Director of Environmental Services, regular operators, and the maintenance staff shall be notified of the time and date of the site test. The tests shall include:

a. Fuel, lubricating oil, and antifreeze shall be checked for conformity to the manufacturer's recommendations, under the environmental conditions present and expected.

b. Accessories that normally function while the set is standing by shall be checked before cranking the engine. These shall include: block heaters, battery charger, generator strip heaters, remote annunciator, etc.

c. Start-up under test mode to check for exhaust leaks, path of exhaust gases outside the building, cooling air flow, movement during starting and stopping, vibration during running, normal and emergency line-to-line voltage, and phase rotation.

d. Automatic start-up by means of simulated power outage to test remote automatic

e. Starting, transfer of the load, and automatic shutdown. Before this test, all transfer switch timers shall be adjusted for proper system coordination. Engine coolant temperature, oil pressure, and battery charge level along with generator voltage, amperes, and frequency shall be monitored throughout the test. An external load bank shall be connected to the system if sufficient building load is unavailable to load the generator to the nameplate KW rating.

END OF SECTION

Section 17
Utility Department Policies for Fats, Oil, and Grease

The City of Tavares recognizes the need to develop Best Management Practices (BMPs) to reduce the discharge of Fats, Oil, and Grease (FOG) into the City's wastewater collection system. Reducing FOG is necessary to protect public health and the environment from the hazards caused by sanitary sewer overflows. In the sewer system, FOG coat the interior surface of the pipes. Over time, FOG accumulations restrict the flow of wastewater through the sewers and can clog sewer pipes, causing sewage to back up and spill on the ground and into waterways, homes, and buildings. This is called a sanitary sewer overflow and endangers public health and the environment.

Besides health and environmental concerns, excessive FOG discharges can also create unnecessary costs to the ratepayers by requiring City staff to clean sewer lines more frequently and to provide additional maintenance on sewer lift stations and the wastewater treatment plant.

Traditionally, Food Service Establishments (FSEs) (typically restaurants) that prepare and serve food or beverages for sale and consumption discharge FOG. By working with food daily, all FSEs generate varying amounts of FOG. Although they are most commonly associated with fried foods, FOG are generated in significant quantities in all types of commercial food preparation.

The City of Tavares recognizes that BMPs are needed for all types of commercial facilities that discharge FOG—not just FSEs. Examples of non-food establishments that discharge FOG are grocery stores, hotels, hospitals, nursing homes, schools, factory kitchens, ice cream/yogurt/frozen custard shops, bars, caterers, car washes, auto dealerships and automotive related facilities, laundries, slaughter houses, bottling plants, and multifamily dwellings (e.g., triplexes, quadraplexes, townhouses, condominiums, apartment buildings, and apartment complexes).

I. Policy

The discharge of FOG impedes the proper conveyance and treatment of sanitary sewage. The City of Tavares, as the controlling authority, is required to regulate FOG discharges from commercial establishments. The City of Tavares Utility Department's policy is to require existing and proposed commercial establishments discharging to the sanitary sewer system to abide by this policy and implement the BMPs in this document to minimize the amount of FOG entering the City's sanitary sewer system. The BMPs outlined in this document require commercial establishments to use grease interceptors/traps and oil/water separators to address their FOG discharges into the City's sanitary sewer system.

II. Statement of Discharge Policy

The following outlines the City's FOG policy:

1. All discharges must be in accordance with applicable state, local, and federal rules and regulations.

2. Unless otherwise approved by the Utilities Director or his/her designee, all commercial facilities that produce FOG must have a properly sized and operational grease interceptor (large external tank), grease trap (smaller "under the sink" fixture), or oil/water separator (large external tank).

3. Sizing and designing grease traps and interceptors must meet the criteria in the Florida Building Code, Chapter 10, Plumbing; the Florida Administrative Code; and other applicable state and local regulations and be approved by the Utility Director or his/her designee before traps or interceptors are installed.

4. All FOG-bearing drains must be plumbed to the interceptor.

5. All grease interceptors and traps must be maintained by the owner/operator (User) of the commercial facility.

6. All non-residential establishments that have the potential to discharge wastes containing residual petroleum-based oil and grease, including but not limited to car washes, auto dealerships, and automotive-related facilities, shall have an approved oil/water separator.

7. Other Users may be required by the Utility Director or his/her designee to install an approved grease interceptor/trap or an oil/water separator as appropriate to properly handle wastes potentially containing FOG.

8. The Utility Director or his/her designee reserves the right to obtain grease trap and oil/water separator samples for testing, without prior notification to the user. Such testing shall be at the Utility Director's sole discretion to ensure requirements of the FOG program are being adhered to by users.

III. Design Requirements

Detailed plans showing the grease trap/interceptor or oil/water separator facilities and operating procedures must be approved by the Utility Director or his/her designee. The City's review and approval shall in no way relieve the User from the responsibility of meeting effluent discharge limitations or properly maintaining the device. Information to be submitted shall include but may not be limited to size, capacity, shop drawings, schematics, plan details, performance data, materials of construction, installation instructions, and operation and maintenance manual. The following design requirements apply to any facility that discharges FOG to the City's sanitary sewer system:

1. A User's discharge to the City's sanitary sewer system of certain liquids or wastes may be prohibited or limited by the provisions of this Section.

2. Wastewater may be discharged to the sanitary sewer system in accordance with conditions in this Section.

3. Wastewater containing FOG derived from animal or vegetable products shall be conveyed through a separate building sewer line to a grease interceptor/trap before being discharged to the sewer system.

4. Wastewater containing FOG derived from petroleum-based products shall be conveyed through a separate building sewer line to the oil/water separator before being discharged to the sewer system.

5. Valve or piping bypass equipment that could prevent a facility's wastewater from entering the appropriate treatment equipment shall not be allowed.

6. The minimum removal efficiency for oil and grease interceptors for animal fats and vegetable oils shall be 80%. The minimum removal efficiency for oil/water separators for trace petroleum-based wastes shall be 90%.

7. Grease interceptors/traps and oil/water separators shall achieve an effluent oil and grease concentration of less than 100 mg/L. The Utility Director or his/her designee may request that the User provide documentation on the design and expected performance of the grease interceptor/trap or oil/water separator.

8. The pH of the wastewater discharged from the grease trap/interceptor, oil/water separator, under-the-sink trap, or other approved unit shall not be less than 5 or greater than 10 standard units at any time.

9. Grease interceptors or automatic grease removal devices shall conform to PDI G101, ASME A112.14.3, or ASME A112.14.4 and shall be installed in accordance with the manufacturer's instructions.

10. The following are the minimum design criteria for grease interceptors:

    a. Nine inches of freeboard.
    b. The inlet and outlet must have a T-pipe attached that extends at least 18 inches down. There should be a clearance of at least 12 inches from the bottom of the T-pipe to the bottom of the interceptor (18 inches preferred).
    c. Two-inch inlet and outlet differential.
    d. At least two compartments with an interior baffle wall extending to the bottom of the interceptor. The baffle wall should extend above the water line of the tank but should allow an air gap at the top. There must be an opening in the baffle wall approximately mid-way from the bottom to the water line. The opening must be at least 18 inches from the bottom and at least 12 inches down from the water line.
    e. Outlet tee must be 6 inches wide for sampling unless a sampling vault is present.

f. 24-inch minimum access openings over both compartments brought up to at least finished grade and protected from surface water runoff. Access covers shall be cast iron or equivalent.
g. The design shall facilitate sampling of the interceptor's effluent, measurement of the grease layer, and cleanout pumping operations.
Joints should be properly sealed using mastic, butyl rubber, or other pliable sealant that is waterproof, corrosion-resistant, and approved for use in grease traps.

11. Grease interceptors shall be equipped with devices to control the rate of wastewater flow so that the wastewater flow does not exceed the rated flow. The flow-control device shall be vented and terminate no less than 6 inches above the flood rim level or be installed in accordance with the manufacturer's instructions.

12. The minimum grease retention capacity for interceptors shall be at least two times the flow-through rate.

13. No emulsifiers, grease cutters, or other chemicals that could cause grease to pass through the grease waste interceptor may be used to maintain a grease waste interceptor or its drain lines. A live bacterial product that does not contain any enzymes, surfactants, emulsifiers, or substances that act as solvents for fat and does not affect the wastewater collection system may be used to clean and maintain, if approved by the Utility Director or his/her designee, based on formulation and demonstrated operational criteria including material safety data sheets.

14. A grease trap intended to serve as a fixture trap in accordance with the manufacturer's installation instructions shall be permitted to serve as the trap for a single fixture or a combination sink of not more than three compartments where the vertical distance from the fixture outlet to the inlet of the interceptor does not exceed 30 inches and the developed length of the waste pipe from the most upstream fixture outlet to the inlet of the interceptor does not exceed 60 inches.

15. Fixture traps shall be self-scouring. Fixture traps shall not have interior partitions, except where such traps are integral with the fixture or where such traps are constructed of an approved material that is resistant to corrosion and degradation. Slip joints shall be made with an approved elastomeric gasket and shall be installed only on the trap inlet and trap outlet and within the trap seal.

16. Fixture trap size shall be sufficient to drain the fixture rapidly. A trap shall not be larger than the drainage pipe into which the trap discharges.

17. All grease interceptors/traps and passive (non-mechanical oil/water separators) shall be equipped with a floatable sludge baffle and a solids sludge baffle.

18. An adequate number of inspection and monitoring points, such as a control manhole or sample port, shall be provided.

19. The design of oil/water separators shall be based on peak flow and where applicable shall be capable of treating and removing emulsions. Oil/water separators shall be sized to allow efficient removal (retention) of petroleum-based oils and greases from the user's discharge into the sewer collection system.

20. Sanitary facilities and other similar fixtures shall not be connected or discharged to the grease interceptor/trap or oil/water separator.

21. If garbage or food grinders are connected to the grease trap/interceptor, a solids removal device shall be installed before wastes are discharged into interceptor/trap.

22. Liquid wastes shall be discharged to the grease interceptor/trap or oil/water separator through the inlet pipe only and in accordance with the design/operating specifications of the device.

23. Grease interceptors/traps and oil/water separators shall be installed in a location that provides easy access at all times for inspections, sludge measurement, cleaning, and proper maintenance, including pumping. The Utility Director or his/her designee shall approve the location of the grease interceptor/trap or oil/water separator before it is installed.

24. Grease interceptors/traps shall not be located in or near any part of a structure where food is handled unless the Utility Director or his/her designee grants an exemption. Requests for exemptions must be submitted in writing to the Utility Director. If an exemption is granted and an under-the-sink indoor trap is approved:

    a. The Utility Director or his/her designee shall approve the location and size of the grease trap before it is installed.
    b. The trap shall be installed with flow control.
    c. The User shall be required to inspect and clean the contents of the trap weekly.
    d. An outdoor in-ground grease/interceptor of proper size shall be required if the trap is found to be in violation of these BMPs more than three times in 12 months.

25. Multifamily dwellings, such as triplexes, quadraplexes, townhouses, condominiums, apartment buildings, or apartment complexes that the Utility Director or his/her designee finds to be contributing FOG in quantities sufficient to cause line stoppages in the collection system, lift station malfunctions, or increased maintenance on the collection system, shall be directed to cease discharging oil and grease to the sanitary sewer system and shall be required to install a grease interceptor/trap. The capacity of the grease interceptor/trap shall be determined on a case-by-case basis. For monitoring purposes, a control manhole or sample port shall be required and installed at the User's sole expense, as approved by the Utility Director or his/her designee.

26. Oil/water separators shall be sized on a case-by case basis using established design guidelines for the proposed facility. A control manhole or sample port shall be installed downstream.

27. Proper operation, maintenance, and repair of grease interceptors/traps and oil/water separators shall be installed solely at the User's expense.

28. Any requests for extensions and/or exemptions to program requirements, installation requirements, compliance schedules, permit fees, and/or deadlines must be made in writing to the Utility Director at least 15 days before the deadline, if a deadline is established. The written request shall include the reasons for the User's failure or inability to comply with the compliance date set forth, the additional time needed to complete the remaining work, and the steps to be taken to avoid future delays.

29. Alternative oil and grease-removal devices or technologies shall be subject to written approval by the Utility Director or his/her designee and shall be based on proven removal efficiencies. Under-the-sink oil and grease traps are prohibited for new facilities.

IV. Sizing and Capacity

1. Grease interceptors/traps and oil/water separators shall be designed in accordance with applicable rules, regulations, and specifications including but not limited to the current Florida Building Code—Plumbing, the Florida Administrative Code, and other applicable state and local regulations.

2. The minimum capacity of a grease interceptor/trap shall be 750 gallons. The maximum capacity of a single interceptor shall be 1,250 gallons. The formula below shall determine the capacity required for a facility. If more than a 1,250-gallon capacity is required using the Florida Building Code formulas below, the device may be chambered in isolated 1,250-gallon sections or two or more devices may be installed in series.

Food Service Establishment Sizing for Grease Traps/Interceptors

Formula:

$$S \times GS \times (HR/12) \times LF = \text{Effective capacity of grease interceptor in gallons}$$

S = Number of seats in dining area
GS = Gallons of waste per seat (use 25 gallons for restaurants with china dishes and/or automatic dishwasher. Use 10 gallons for restaurants with paper or baskets and no dishwasher.)
HR= Number of hours the restaurant is open.
LF = Loading factor (use 2.00 interstate highway, 2.50 other freeways, 1.25 recreational area,

1.00 main highway, and 0.75 other highway).

Other Commercial Kitchen Sizing for Grease Traps/Interceptors

Formula:

M	x	GM	x	LF	=	Effective capacity of grease interceptor in gallons

M = Meals prepared per day.
GM= Gallons of waste per meal (use 5 gallons).
LF = Loading factor (use 1.00 with dishwasher and 0.75 without dishwasher).

Under-The-Sink Fixture Sizing for Grease Traps

Formula:

((S x .75) / 231 cubic inches) / 2 Minutes = Gallons per minute for grease trap

S = Sink(s) volume in cubic inches

3. The minimum capacity of an oil/water separator shall be 750 gallons. The maximum capacity of a single separator shall be 1,250 gallons. The formula below shall determine the capacity required for a facility. If more than a 1,250-gallon capacity is required using the formula below, two or more devices may be installed in series. Sizing shall be as follows.

Oil/Water Separator Sizing

Formula: 6 cubic feet for first 100 square feet of area to be drained + 1 cubic foot for each additional 100 square feet of area to be drained into separator (where 1 cubic foot = 7.48 gallons)

V. Installation

1. Proposed Facilities
On or after the effective date of this BMP, proposed facilities with the potential to discharge FOG to the City's sewer system shall be required to install an approved grease interceptor/trap or oil/water separator. Grease interceptors/traps or oil/water separators shall be installed in accordance with this BMP before the opening of the facilities are open. A control manhole or sample port for monitoring shall be required and installed at the User's sole expense, as approved by the Utility Director or his/her designee.

2. Existing Facilities
On or after the effective date of this BMP, existing facilities discharging FOG to the City's sewer system shall be required to install an approved grease interceptor/trap or oil/water separator when any of the following conditions exist:

   a. The Utility Director or his/her designee finds the facility to be contributing FOG in quantities potentially sufficient to upset or interfere with the City's sanitary collection systems or necessitate increased maintenance on the collection system.
   b. The facility is remodeled or expanded to include or increase the potential for a FOG discharge. The Utility Director or his/her designee shall determine the compliance date.

VI. Required Maintenance Practices

1. To prevent introduction of FOG to the City's sanitary sewer system, grease interceptor/traps, oil/water separators, and under-the-sink grease traps must be maintained as follows:

   a. Grease Interceptor (750 gallons or over):

      i. A minimum of every 90 days or more often if grease and solids levels reach 25% of the tank volume.

   b. Grease Interceptor (50 gallons to 750 gallons):

      i. A frequency not to exceed 30 days.

   c. Grease Trap (less than 50 gallons):

      i. A frequency not to exceed 15 days.

   d. Under-the-Sink Indoor Trap:

      i. The facility will be required to monitor all contents of the trap weekly. The contents shall be disposed of in a manner approved by the Utility Director that is not harmful to the environment or wastewater system.
      ii. A deep cleaning (scraping of the walls, baffle, inlet, and outlet) shall be required quarterly or monthly and shall be determined based on inspection(s).
      iii. Trap sludge contents shall not exceed 20% capacity.
      iv. Lid, seal, baffle, inlets, and outlets shall be approved by the Utility Director and maintained in proper working condition.

e. Oil/Water Separators (all sizes):

i. Cleaning shall be performed when 75% of the retention capacity of the device has been reached. Oil/water separators shall be cleaned out completely at least once every 6 months or more frequently as needed to prevent carryover of petroleum-based products into the collection system.

2. The extracted material shall not be reintroduced into the sanitary sewer.

3. Grease interceptor/traps and oil/water separators must be inspected to ensure proper functionality during each pump-out event.

4. The User shall provide for all cleaning and maintenance of grease interceptors/traps, oil/water separators, and under-the sink traps. Cleaning shall include completely removing all contents—including floating materials, wastewater, sludge solids and debris—and removing materials from the tank walls, baffles, inlet tees, and outlet tees. Outdoor grease interceptors/traps shall be cleaned by an FDEP-certified waste hauler.

5. Decanting, back-flushing, or discharging of removed wastes back into a grease interceptor/trap or oil/water separator is prohibited.

6. Grease interceptors/traps shall be deep cleaned annually. Pressure washing or scraping walls, baffles, inlet tees, and outlet tees are acceptable methods of deep cleaning.

7. Wastes removed from each grease interceptor/trap or oil/water separator shall be disposed of at a facility permitted to receive such wastes or at a location designated and permitted for such purposes, in accordance with FDEP requirements. Pumpage shall not be returned to any private or public portion of the collection system or the treatment plants without prior written approval from the Utility Director or his/her designee.

8. Flushing the grease interceptor/trap or oil/water separator with water that is more than 104° Fahrenheit is prohibited.

9. Grease interceptors/traps and oil/water separators shall be maintained in proper working order. Inlet and outlet tees shall not be obstructed by sludge or debris or be capped. Both tees shall have vents that remain clear and visible above the water surface. Lids shall have a water- and gas-tight seal and be intact.

10. The User, at the User's sole expense, shall perform all maintenance and repairs of oil and grease management devices, including proper disposal of generated wastes.

VII. Wastewater Discharge Permits

1. It shall be unlawful for any commercial establishment producing wastewater containing FOG to discharge into the City's collection system without authorization from the Utility Director or his/her designee. Authorization shall be given in the form of a Wastewater Discharge Permit. Application for a permit shall be made to the Utility Director or his/her designee. If after examining the Wastewater Discharge Permit application, the Utility Director or his/her designee determines that the proposed facility does not conflict with the provisions of the BMP, a permit shall be issued to allow the discharge into the collection system. Each Wastewater Discharge Permit shall be issued for no longer than 5 years. The User shall apply for a permit reissuance a minimum of 90 days before the expiration of the User's existing permit. The terms and conditions of the permit may be subject to modification by the Utility Department during the term of the permit as limitations or requirements as identified in this BMP are modified or for other just causes. The User shall be informed of any proposed changes in the issued permit at least 60 days before the effective date of the change(s). Any changes or new conditions in the permit shall include a reasonable schedule for compliance.

2. As a condition of the granting of a Wastewater Discharge Permit, the User shall agree to hold harmless the City and the City's employees from any liabilities arising from the User's operations under this permit.

3. The City shall set fees for issuance and annual renewal of Wastewater Discharge Permits.

VIII. Reporting Requirements

1. The User shall keep a log that confirms pumping, hauling, and disposal of waste to track pumped wastes from grease interceptors/traps and oil/water separators. This manifest shall contain the following information:

   Generator Information:
   Facility Name
   Contact Person
   Address
   Telephone Number
   Date Maintenance Performed

   Transporter Information:
   Company Name
   Contact Person
   Address
   Telephone Number

Destination Information Disposal Site or Facility:
Company Name
Permit Number(s)
Contact Person
Address
Telephone Number

Pumping Information:
Date
Time
Volume pumped
Transporter Name
Transporter Signature
Witness Name
Witness Signature

2. The User shall maintain a log of pumping activities onsite for the previous 12 months. City personnel shall have immediate access to the current pumping log, which shall be readily available for FOG Program inspections.

3. The User shall maintain a maintenance log of all maintenance activities onsite for the previous 12 months. City personnel shall have immediate access to the log, which shall include the following information:

   Name of Establishment
   Address
   Phone
   Location of Interceptor, Oil/Water Separator or Under-the-Sink Trap
   Date
   Inspector's Name and Signature
   Depth of fats, oils, grease, and waste within the grease trap/interceptor at time of inspection
   Cleaning Method Used
   Grease Pumped: Yes or No

4. The User shall maintain a file of records and other documents pertaining to the facility's grease interceptor/trap or oil/water separator. The file contents shall include but are not limited to the record (as-built) drawings, record of inspections, log of pumping activities and receipts, log of maintenance activities, hauler information, disposal information, and monitoring data. The file shall be available at the Utility Director's or his/her designee's request and must be kept for 5 years.

5. If a violation of this BMP is discovered during a scheduled inspection or if a problem such as line stoppages or increased maintenance on the collection system or the wastewater treatment plant system is determined to be a result of the discharge

from a facility, additional inspections may be required. For each additional inspection, the City shall charge the User a $100 Additional Inspection Fee. If there is no immediate threat of upset, interference, or potentially harmful discharge, additional inspections shall not be conducted within 1 week of the scheduled inspection.

6. The Utility Director or his/her designee may require the User to provide, operate, and maintain at the User's expense appropriate monitoring facilities such as a control manhole that are safe and accessible at all times for observation, inspection, sludge measurement, sample collection, and flow measurement of the User's discharge. The Utility Director or his/her designee may impose additional limitations and monitoring requirements for the discharge to the wastewater treatment plant in accordance with the provisions set forth in this BMP.

IX. FOG Program Inspections

1. Utility Department personnel shall conduct an inspection on all facilities with grease interceptors/traps or oil/water separators with a 750-gallon capacity or greater annually.

2. Facilities with devices with a capacity between 100 and 750 gallons shall be inspected once per year.

3. Grease interceptors/traps with a capacity of less than 100 gallons shall be twice per year.

4. If an inspection by the Utility Department finds one or more of the requirements below are not being met, an Additional Inspection Fees may be charged for a follow-up inspection, or a Notice of Violation may be issued to the facility:

    a. The grease interceptor/trap or passive oil/water separator shall be readily accessible, with vented inlet and outlet tees that break the water surface and extend to within 12–18 inches from the bottom of the floor, baffle(s) that are intact, and lid(s) with a good seal. Automatic oil/water separators shall be operating effectively.
    b. The contents of the interceptor or separator shall not exceed 20% total capacity.
    c. Concrete lids shall be replaced with either manhole lids for traffic-bearing areas or plastic lids or manhole lids for non-traffic bearing areas.
    d. A pumping log shall be posted or be readily accessible for inspection. Information on this log shall include at minimum hauler (pumper) name, last pump date, volume pumped, and pumping frequency.
    e. If a fryer is used, the used oil shall be recycled. A form of documentation shall be onsite. The storage container shall have a lid that remains closed at all times other than during use.

f. Corrosive chemicals shall not be stored near floor drains. If they are, they shall be secondarily contained to prevent spills and/or leaks.

X. Violations and Non-Compliance

1. The Utility Director or his/her designee shall issue a Notice of Violation to a User for:

    a. Failing to properly maintain (clean out or pump) the grease interceptor/trap or oil/water separator in accordance with the provisions of this BMP.
    b. Contributing to a FOG-related sewer overflow or potential FOG-related sewer overflow if the facility's grease interceptor/trap or oil/water separator is out of compliance with this BMP when the incident is investigated.
    c. Failing to provide access to the facility for inspections, pumping logs and records, or oil and grease management devices for sludge measurements and sampling by an authorized City employee.
    d. Failing to obtain or renew a Wastewater Discharge Permit in a timely manner.
    e. Failing to pay program fees in a timely manner or to correct a previous violation by an established deadline.

2. If a User violates or continues to violate the provisions in this section or fails to initiate/complete corrective action within the specified period in response to a Notice of Violation or Notice of Significant Noncompliance, the Utility Director or his/her designee may pursue one or more of the following options:

    a. Charge the User $100 for each additional inspection conducted as a result of the violation.
    b. Pump, maintain, and/or repair the grease interceptor/trap or oil/water separator, and place the fee for this service on the User's monthly sewer bill.
    c. Impose an administrative fine or penalty in accordance with the rules and procedures set forth in this BMP.
    d. Revoke the facility's Wastewater Discharge Permit.
    e. Suspend or terminate water and sewer service.
    f. Any combination of the enforcement actions above.

3. If water and/or sewer service is suspended or terminated, the User shall pay all outstanding fees, penalties, and other utility charges before water and sewer service is reinstated.

4. If the User shows good and timely correctable actions for a violation, the permit shall not be revoked nor shall service be terminated.

APPENDIX A

APPROVED VENDORS

1. Under-the-Sink Traps

If approved by the Utility Director or his/her designee, Under-the-Sink Traps shall be:

Thermaco “Big Dipper” or approved equal. If an approved equal is desired, it shall be submitted to the Utility Director and shall include a side-by-side table comparing all of the features of the equal trap to the Big Dipper.

2. Grease Interceptor

Where approved by the Utility Director or his/her designee shall be:

Thermaco “Trapzilla ” or approved equal. If an approved equal is desired, it shall be submitted to the Utility Director and shall include a side-by-side table comparing all of the features of the equal trap to the Trapzilla.

3. Oil/Water Separators

Where approved by the Utility Director or his/her designee, oil/water separators shall be:

Freytech “Ecoline-B,” “Xerxes,” or approved equal.

SECTION 18
REUSE SYSTEM

1.01 SCOPE

A. This section includes general technical criteria for the design and installation of a reclaimed water piping system. The relevant provisions of other sections of this specification shall be applicable to this section unless otherwise indicated herein or approved by the City. The Contractor shall provide all work necessary for the construction and testing of a reclaimed water piping system. This work shall include the installation of all reclaimed water lines, services, fittings, and appurtenances as may be required to complete the work as indicated in the plans and as specified herein. The work shall also include such connections, reconnections, temporary service, and all other provisions in regard to existing sewer operations and modifications as is required to perform the new work. All references to Industry Standards (ASTM, ANSI, AWWA, etc.) shall be to the latest revision unless otherwise stated. Only those materials included in the City of Tavares Construction Specifications Manual shall be installed. All materials shall be new unless specifically called for otherwise.

1.02 GENERAL

A. Submittals:

All submittals shall be submitted in accordance with the shop drawing submittal requirements as specified in Section 1, General Provisions.

1. Shop Drawings: The Contractor shall submit catalog cut sheets, manufacturer's descriptive literature, and other necessary information to the Engineer for approval before installing pipe.
2. Certifications: The Contractor shall submit a certification from the pipe manufacturer that the pipe and fittings supplied are new, have been manufactured for this project, and have been inspected at the plant.

1.03 DESIGN

A. Prior to installation of any reclaimed water system, a hydraulic model of the reclaimed water system shall be performed by a Professional Engineers registered in the State of Florida. The modeling software used shall be WaterGEMS or other software approved by the Utility Director or his Designee. The modeling results shall be submitted to the Utility Director for approval prior to installation of any reclaimed water system. The Utility Director shall establish minimum flow and pressure criteria to be used for modeling purposes.

B. No cross connection between the reclaimed water system and the potable water system shall be allowed.

C. All reclaimed water piping and appurtenances shall be clearly identified to inform the public and employees that the water is not intended for drinking.

D. The following features shall be included in the design of reclaimed water facilities:

1. All reclaimed water transmission and distribution piping shall be a minimum of 6 inches in diameter or larger.
2. All reclaimed water transmission and distribution piping shall be color coded purple. For HDPE mains, the color shall be an integral part of the pipe material. All ductile iron piping above ground (including bridge crossings) shall be color labeled "RECLAIMED WATER" stenciled in the center of each joint of pipe utilizing oil based paint. Stenciled lettering shall be 4-inch-high (minimum) lettering and be Pantone purple.
3. All aboveground valves, meters, and other devices, and other appurtenances shall be painted purple. The color standard for paint shall be Pantone color 522C with light color stableant or approved equal. All valves shall be permanently stamped or tagged with stainless steel tags on the extension stem, labeled with "RECLAIMED WATER", valve type and number of turns to open. In addition, the body of the valve shall be marked as reclaimed water and the Tee Head shall include "RW" or City approved equal which designates it as reclaimed water valve.
4. Covers for all valve boxes and other belowground devices on the reclaimed water system shall be painted purple. Covers shall be permanently embossed with the wording "Reclaimed Water, Do Not Drink" in English, and in Spanish "No Beber," and should have the International "Do Not Drink" symbol embossed on the cover. Valve boxes shall be square, U.S. Foundry or approved equal.

E. <u>Tracer Wire and Warning Tape Installation</u>:

1. General: Wherever non metallic pipe is installed, #8 tracer wire and warning tape shall be installed to facilitate future location of reclaimed water main.
2. Tracer wires shall begin and terminate in the test boxes. Wire shall run continuously through test stations for the entire length of the pipe line and shall be strapped to the pipe at ten-foot intervals Test boxes shall be installed at each location as shown on the plans, spaced at intervals not exceeding the service connection spacing. Test boxes shall not be installed in streets or driveways. Tracer wire between boxes shall be

continuous, unbroken lengths. The tracer wire shall not be installed in tension, but neither shall there be "coils" in the wire. The ends of the tracer wires shall be installed in the test boxes. The length of each tracer wire in each box shall be long enough to extend no less than one foot and no greater than two feet above ground level. Breaks shall be repaired by splicing with a split-bolt clamp or pre approved equal. Repairs by "twisting" the two ends together will not be accepted.

3. Warning tape shall be buried in the backfill approximately one foot over the top of the PVC reclaimed water main. Tape shall be laid in continuous lengths. Any breaks or tears shall be repaired before proceeding with the backfilling operations.

F. Reclaimed Water Service Connections:

1. All reclaimed water services lines shall extend to the City's right-of-way line and shall include meter, meter box, valves, fittings, adapters and appurtenances necessary for a proper installation. In no case shall the City's reclaimed water service extend onto private property.
2. It shall be the sole responsibility of the homeowner or business to connect to the reclaimed water service connection at the right-of-way line. The City shall not be responsible for installation or maintenance of any reclaimed water service line beyond the City's right-of-way line. The homeowner or business shall obtain a plumbing permit for connection to the City's reclaimed water service connection.
3. All reclaimed water service lines 2 inches in diameter and smaller shall be constructed of polyethylene (PE) tubing, DR9.
4. All service connections greater than 40 feet in length are known as "long-side" service connections and shall be cased as shown in the Plans. One electronically detectable 8-gauge stranded THWN copper tracer wire shall be installed with each long-side service. The service tubing and tracer wire for a long-side service shall be installed inside a casing sleeve, as shown in the Plans.
5. Polyethylene extrusion compound from which the PE pipe and tubing are extruded shall comply with the applicable requirements for the Type III, Grade P34, Class C, PE 3408, very high molecular weight polyethylene plastic material, as specified in ASTM D1248, a cell classification of 345434C, or 355434C as specified in ASTM D3350.
6. Polyethylene tubing shall be SDR 9-200 PSI type CTS (copper tubing size) or approved equal. The average outside diameter, minimum wall thickness, and respective tolerances for any cross-section shall be as specified in ASTM D2737.
7. Polyethylene reclaimed water service pipe or tubing shall be identified with solid purple coloring and shall be equal in every respect to PLEXCO PE3408 Industrial Piping or ENDOT Reclaimed Water Tubing.

1.04 INSTALLATION

A. Pipe materials and appurtenances, installation and construction details, shall comply with the requirements of Section 19 - WATER PIPE, FITTINGS, VALVES, AND APPURTENANCES, in addition to the requirements specified in this section.

B. The Contractor shall not install reclaimed water mains in the same trench with potable water mains. Wherever practical, reclaimed water mains shall be installed on the opposite side of the street from potable water mains. Underground water mains shall be laid to provide a horizontal distance of at least 6 feet, and preferably 10 feet between the outside of the water main and the outside of any existing or proposed gravity- or pressure-type sanitary sewer, wastewater force main, or pipeline conveying reclaimed water not regulated under Part III of Chapter 62-610, FAC. Underground water mains crossing any existing or proposed pressure-type sanitary sewer, wastewater or stormwater force main, or pipeline conveying reclaimed water shall be laid so the outside of the water main is at least 12 inches above the outside of the other pipeline. Where 12 inches of vertical clearance cannot be maintained, the crossing shall be arranged so that the joints of the two pipes are equidistant from the point of crossing with no less than 10 feet between any two joints. Alternatively, the reclaimed water main may be placed in a casing to obtain the equivalent of the required 10-foot separation.

C. Where minimum horizontal and/or vertical separation between reclaimed water mains, potable water mains, sanitary sewers, and sanitary force mains cannot be maintained, watertight joints complying with public water supply design standards shall be used.

D. The Contractor shall provide and install fusing service saddles, tapping saddles, and valves for each service connection. After installing the sleeve and before making the tap, the Contractor shall ensure that the sleeve is providing a watertight joint by pressure testing with pressures in accordance with this Section. If leaks are present, the Contractor is required to repair them to satisfaction of the Engineer of Record or City.

E. Connections to existing reclaimed water pipelines shall be made as shown on the Contract Drawings. Coordination between the City and the Contractor shall be required to accomplish this task. The Contractor shall supply connection, procedure, and customer notification schedules to the City and Engineer of Record, for approval, 2 weeks before the proposed connection date.

F. All connections to existing reclaimed water mains shall be made in the presence of the Engineer of Record and the City. Valves on existing reclaimed water mains

will be operated by City personnel or under their direct supervision. Temporary plugs or caps shall be installed on new mains until the pressure and leakage tests are completed. Upon satisfactory completion of the tests, the caps or plugs shall be removed and the connections made to the existing reclaimed water mains.

G. A 'V' cut shall be carved in the curb closest/adjacent to a below grade valve. This 'V' cut shall be painted pantone purple. Reclaimed water services serving vacant lots (service not in use), shall include an "R" cut in the curb (closest to the meter box), and painted pantone purple.

H. Reclaimed water meter boxes or services shall be constructed similar to domestic water services, located inside the City right-of-way line, and should be located away from each other, unless approved otherwise by the City.

1.05 CROSS-CONNECTION/BACKFLOW

A. No cross connection between the reclaimed water system and the potable water system shall be allowed.

1.06 TESTING

A. Flushing of the reclaimed water system is required utilizing either potable water or reclaimed water, (when available).

B. Hydrostatic Testing:

1. All field tests shall be made in the presence of a representative of the Engineer of Record. Except as otherwise directed, all pipelines shall be tested. All piping to operate under liquid pressure shall be tested in sections of approved length, typically from valve to valve and in no case longer than 5,000 feet.

2. Hydrostatic testing shall consist of a combined pressure test and leakage test. The test pressure shall be as indicated in the piping schedule presented on the Drawings. The pressure shall be applied by a pump connected to the pipe in a manner satisfactory to the Engineer of Record. The pump, pipe connection, and all necessary apparatus shall be furnished by the Contractor and shall be subject to the satisfaction of the Engineer of Record and the City.

3. The maximum duration for any test including initial pressurization, initial expansion, and time at test pressure must not exceed 8 hours. If the test is not completed due to leakage, equipment failure, etc., the Contractor shall

depressurize the test section, and then allow the test section to “relax” for at least 8 hours before bringing the test section up to test pressure again.

4. Monitored Make-Up Water Test: The test procedure consists of initial expansion and test phases.

   a. During the initial expansion phase, the test section is filled with water. Once the line is filled, make-up water is added as required to maintain the test pressure for 3 hours.
   b. At the end of the 3-hour period, the addition of make-up water will cease. During the test phase, the pipe will not have any water added to it for the following 2 hours. The 2 hours will be the actual leakage test. At the end of the 2-hour period, measured make-up water will be added to the pipe to return it to the original test pressure.
   c. If the amount of make-up water added is greater than calculated using the numbers listed below, the section being tested will be considered to have a leak. The leak shall be found and fixed at the Contractor’s expense and that section of line retested before continuing with subsequent leakage tests. Testing and repairs shall be repeated at the Contractor’s expense until the amount of make up water is less than the amount calculated using the numbers listed below.

Nominal Pipe Size (in)	Make-up Water Allowance (gal/100ft)
1.25	0.060
1.5	0.065
2	0.07
3	0.10
4	0.13
6	0.30
Nominal Pipe Size (in)	Make-up Water Allowance (gal/100ft)
8	0.50
10	0.80
12	1.10
14	1.40
16	1.70
18	2.20
20	2.80
24	4.50

C. The Contractor shall be required to perform a separate hydrostatic/leakage field test on each valve installed to insure it is bubble tight. The duration of this test shall be 15 minutes at 150 psi and conform to AWWA C504. The method of performing this test shall be left up to Contractor with the Engineer of Record's approval. The failure of the valve to perform will result in its removal from the job site and replacement by the Contractor at the contractor's expense.

END OF SECTION

SECTION 19
RIGHTS-OF-WAY AND EASEMENTS

1.01 SCOPE

A. This section covers the requirements and work pertaining to the rights-of-way and easements necessary for the construction of the project.

1.02 WORK ON RIGHTS-OF-WAY AND EASEMENTS:

A. The City will obtain all land and rights-of-way necessary for all work under this contract. If all land and rights-of-way are not obtained before construction begins, the Contractor shall start work only upon such land and rights-of-way previously obtained by the City, and no claims for damages will be allowed because of such delay. If the City is unable, for any reason, to obtain the land and rights-of-way necessary for the work, the contract time will be extended as required to cover the time lost by such delay. The Contractor shall secure copies of all applicable right-of-way plats to be kept at the job site during construction.

B. Contractor shall confine his construction operations to the immediate vicinity of the location shown on the plans and in no case shall the Contractor encroach beyond the limits of the City's property or rights-of-way. The exact location of the rights-of-way limits shall be shown on the rights-of-way plats which will be furnished to the Contractor. The Contractor shall place materials, equipment, supplies, etc., so as to cause the least possible damage to property and interference with traffic. His method of operation and placing of equipment shall be subject to the approval of the Engineer of Record. Any damage done to property outside the rights-of-way limits shall be the financial responsibility of the Contractor. Any vehicular access to right-of-way which crosses private property shall be by written permission of the property owner with copy of same provided to the City Inspector.

C. It shall be the duty of the Contractor to locate the limits of the rights-of-way, or property lines, prior to beginning construction. The Contractor shall be solely responsible for any damage to trees, crops or other property outside the boundaries of the rights-of-way and shall make satisfactory settlement for any damage directly with the property owner involved.

D. Clearing and Grubbing. Contractor shall consult with the City and Engineer of Record prior to beginning clearing and a full understanding is to be reached as to procedure. Contractor shall then conduct clearing and grubbing operations in strict accordance with these agreements, the specifications herein and

Specification Section 21, Temporary and Permanent Erosion and Sedimentation Control.

1. Clearing and grubbing along pipelines shall be done prior to pipe installation. Where a temporary construction easement is obtained, clearing shall be limited to that which is absolutely necessary for construction of the project. The entire permanent right-of-way shall be cleared and grubbed, unless otherwise noted. All timber cut shall be completely removed and disposed of by the Contractor within ten days, unless otherwise noted on the plans.

2. Grubbing of Stumps shall be done in any convenient manner satisfactory to the Engineer of Record and which will not cause damage to the remaining trees or adjacent property. No burying of construction debris will be allowed in right-of-way limits. If burying is done outside right-of-way limits, written permission from the property owner must be obtained.

3. Minor Structures within rights-of-way limits shall be removed and disposed of as directed by the Engineer of Record. Fences shall be removed as required by construction and replaced to property owners' satisfaction with materials as good as or better than that which was removed. Temporary fencing, as required, shall be installed to property owners' satisfaction until permanent fencing can be erected.

4. Burning of Cleared Material shall be accomplished in strict compliance with all applicable local, state and federal regulations pertaining to open burning and smoke abatement. Contractor shall contact the local Fire Department for a burning permit.

1.03 WORK ON STATE AND COUNTY HIGHWAYS OR ROADS, TOWN OR CITY ROADS OR STREETS, RAILROAD AND OTHER UTILITY RIGHTS-OF-WAY:

A. The Contractor shall not begin excavation, grading, fill, storm drainage, paving and any other construction or installations on any property or in any right-of-way of streets, highways, public carrier lines, utility lines (either aerial, surface or subsurface), etc., until the necessary permits are secured. The Contractor shall conform to all requirements of the authorities having jurisdiction and to the applicable requirements of the specifications. Contractor shall make all necessary arrangements with the proper authorities, including approval of construction methods, etc., and shall pay all costs charged in connection with work. Contractor shall notify the Florida Department of Transportation at least 48 hours in advance of any work performed on State roads and shall notify Lake County at least 24 hours in advance of any work performed on County roads in accordance with the respective permits.

B. The Contractor shall provide full time flagmen, with appropriate red flags, at all times when work is in progress along highways. Suitable warning and descriptive signs shall be placed at each end of the working area while work is in progress along highways. These signs shall be well tended, and shall be placed at sufficient distances from the work so that ample warning is given to approaching traffic. Signs shall be adequately lighted at night. During construction, all safety regulations of the FDOT shall be observed and the Contractor must take measures, including placing and the display of safety devices that may be necessary in order to safely conduct the public through the project area in accordance with the Federal MUTCD, as amended for highways, the requirements of the Standard Application Package for railways, including flagging services and Railroad Protective Insurance or acceptable alternative, when applicable, and the FDOT's Design Standards, Indexes 600-670, and Standard Specifications for Road and Bridge Construction, Section 102, as amended by the UAM. When the Contractor deems it necessary to conduct Traffic Control activities and methods significantly different form those addressed in the above references, the Contractor must submit to the City an alternative plan signed and sealed by a licensed Florida professional engineer qualified to develop TCP in accordance with the provisions of Chapter 8 of the UAM and the plan must be approved by the state (FDOT) or local entity (City or County) prior to implementation.

C. Where pipe is installed in open cut across a highway, the cut shall be immediately backfilled and all work of repairing the pavement completed within the same week that it is cut. The Contractor shall keep at least one full lane open for traffic at all times. Any subsequent settlement shall be immediately corrected and repaired.

D. Where a pipeline crossing under a highway is installed within casing pipe, the casing pipe shall be provided as specified in Section 8, Boring and Tunneling.

E. Unless otherwise indicated, no excavated material shall be placed on the pavement side of the ditch along highways. The least possible amount of ditch shall be left open when work is not in progress, and equipment shall be removed from the pavement and shoulders during shutdown periods. Shoulders of roadways shall be left in good acceptable condition, and all disturbed topsoil and grass shall be replaced.

F. The Contractor shall not begin work on any property of any Railroad until the City has secured necessary permits. Contractor shall conform to all requirements of the Railroad, or its authorized representatives, in the construction of this portion of the work.

1. The Contractor shall also pay the cost of flagmen, inspections or other expenses of the railroad in protecting rail or vehicular traffic. The Contractor shall notify the railroad of the time that the work will be done and shall not begin work until authorized by Railroad officials.

1.04 RESTORATION OF RIGHT-OF-WAY:

A. During construction, the Contractor shall maintain the site and adjacent public and private property, including streets and highways, free from accumulations of waste debris, rubbish and dirt caused by his operations. Dry materials and rubbish shall be wet down as necessary to prevent blowing dust.

B. Immediately after completion of the work, or any substantial unit or portion of it, the Contractor shall remove all unused material, refuse and dirt placed by him in the vicinity of the work and shall leave the premises in a neat and orderly condition, satisfactory to the Engineer of Record.

C. The right-of-way shall be restored to original or better condition. Horizontal benches shall be provided to facilitate access to the site and shall be located where directed by the Engineer of Record and the City. Fill material, where required, shall be free of grass, roots, rock and other objectionable material and shall be spread evenly and properly compacted. The entire right-of-way shall be graded, dressed off and cleaned up to the satisfaction of the Engineer of Record, City and property owner, where applicable.

1. Where work is along streets or highways and dirt has been placed on the pavement, the pavement shall be swept clean of all dirt after backfill has been completed.

2. Site: The Contractor shall clean up behind the work as much as is reasonably possible as the work progresses, but in no case shall the pipe laying operation be more than 1000 feet ahead of complete cleanup. Upon completion of the work and before acceptance of the Final Payment for the project by the City, the Contractor shall remove all his surplus and discarded materials, excavated material and rubbish from the roadways, sidewalks, parking areas, lawns and all adjacent property; shall restore, in an acceptable manner, all property, both public and private, which has been disturbed or damaged during the prosecution of the work; and shall leave the whole site in a neat and presentable condition.

3. Except where specifically directed otherwise by the property owner, the entire construction right-of-way shall be provided with a permanent grass cover within 30 days after backfilling. Topsoil shall be replaced and seed planted or sod placed, fertilized and watered until a grass cover

satisfactory to the Engineer and property owner is obtained. If necessary, a temporary grass cover shall be provided until a permanent cover can be established. Grassing shall be as specified in Section 20, Grassing and Sodding. If required by the property owner, shrubbery shall be replaced to the satisfaction of the Engineer of Record and the property owner.

END OF SECTION

SECTION 20
GRASSING AND SODDING

1.01 SCOPE

A. The work under this section includes the furnishing of all labor, material, equipment, and supervision required to grade, install and maintain grass and sod in all areas shown on the Contract Drawings or specified herein.

1.02 GENERAL

A. It is the intent of these specifications to provide a complete grassing and sodding procedure which shall be carefully followed, and, upon consultation with the City or Engineer of Record, shall be adjusted to meet unforeseen weather and soil conditions so as to secure a successful planting of the areas to be grassed or sodded. All grassed areas that are disturbed or damaged by the construction operation shall be restored by re-sodding or seeding and mulching after fill has been graded to meet the existing contours. Sod shall be similar to the type of grass in place and shall be fresh, live and well rooted. Areas to be seeded and mulched shall be agreed upon and approved by the City or Engineer of Record prior to excavation. Unless approved otherwise by the City or Engineer of Record, the sodded areas shall be uniform level and smooth without dips or holes.

1.03 PLANTING

A. Materials:

Materials shall be approved by the City or Engineer of Record prior to use.

1. Topsoil: The Contractor shall provide topsoil from off-site or from on-site excavation as approved by the City or Engineer of Record. Topsoil shall be friable and loamy (loam, sandy loam, silt loam, sandy clay loam, clay loam) and shall be free of debris, trash, stumps, rocks, roots and noxious weeds.

2. Seed: During the period March 15 to October 15, the seed mixture shall be 100% Argentine Bahia. During the remainder of the year the mixture shall be 1/3 each of Argentine Bahia, Bermuda and Rye grass seed.

3. Sod: The Contractor shall provide strongly rooted sod, not less than 2 years old and free of weeds and undesirable native grasses. Provide only live, fresh and uninjured sod capable of growth and development when planted (viable, not dormant) and in strips not more than 18 inches wide x

4 feet long. Provide sod composed principally of Argentine Bahia, St. Augustine or Centipede to match existing grass type and adequate irrigation system is provided. No sod which has been cut for more than 72 hours shall be used unless specifically authorized by the City or Engineer of Record after careful inspection thereof. Any sod which is not planted within 36 hours after cutting shall be stacked in an approved manner and maintained properly moistened.

4. Mulch: The mulch material shall be straw or hay, consisting of oats, rye or wheat straw, or a Pangola, Peanut, Bermuda or Bahia grass hay. Mulch shall be free from undesirable weed and other undesirable grasses.

5. Sprigs: Sprigs shall be of St. Augustine grass or other types, as directed by the City or Engineer of Record. A sprig shall be a stolon, also known as a runner, approximately 4 inches long.

6. Erosion Control Fabric: The Contractor shall provide 70% agricultural straw with 30% coconut fiber matrix stitches with degradable nettings, designed to degrade within 18 months. Erosion control anchors shall be as recommended by the manufacturer

7. Lime shall be finely ground agricultural or dolomitic limestone.

8. Fertilizer for Grassing, Sodding and Sprigging: For temporary seeding, fertilizer shall be 10-20-20. For permanent seeding, fertilizer shall be 5-20-10. For sodding and sprigging, fertilizer shall be 10-10-10 in fall and 5-10-10 in spring. Equivalent nutrients may be applied with other fertilizer formulations.

B. Preparation:

All preparation and planting shall be done in an acceptable manner and by competent personnel.

1. The Contractor shall coordinate all work activities to provide for establishing grass or sod cover at the earliest possible time in the construction schedule to minimize erosion of topsoil.

2. If grading is completed and ready for grassing or sodding at a time inappropriate for establishing the permanent grass cover, temporary coverage shall be provided for protection of graded surfaces until such time that permanent cover can be established. Temporary cover shall be provided as specified below. Contractor shall return to the site and

provide the permanent cover, in the manner specified in the contract drawings, and at such time as may be suitable.

a. Surface area to be temporarily grassed shall be prepared as for permanent cover.

b. Area to be grassed shall be planted with Rye or Sudan grass for temporary protection. Seed shall be applied at such rates as to provide for adequate and acceptable temporary cover.

c. After temporary planting is completed, the planted areas shall be watered as specified in the maintenance section below.

3. Grassing and sodding shall not be performed when weather and soil conditions are, in the City's or City Representative's opinion, unsuitable for proper results.

4. Seed, sod, and sprigs shall be placed only when the soil is moist and in proper condition to induce growth. Moisten areas prepared for grassing before planting if the soil is dry. Water thoroughly and allow the surface to dry off before planting. Do not create a muddy soil condition.

5. Dispose of any existing sod, growth, rocks, or other obstructions which might interfere with tilling, seeding, sodding, or later maintenance operations. Remove stones over 1-1/2 inches in any dimensions and sticks, roots, rubbish, and other extraneous matter. Remove from site: do not stockpile.

6. Till to a depth of not less than 300 mm (12 inches). Thoroughly loosen and pulverize topsoil.

7. Spread planting soil mixture to depth required to meet thickness, grades, and elevations indicated after light rolling and natural settlement. Do not spread if material is frozen or if subgrade is frozen. Top soil shall be maintained at a minimum compacted depth of 2 inches on 3:1 or steeper slopes and 4 inches on flatter slopes, the contractor shall add top soil as required to meet these depths. Where soils are known to be highly acid (pH 6.0 and lower), lime should be applied at the rate of two tons of pulverized agricultural limestone per acre. Grade grassed areas to a smooth, even surface with loose, uniformly firm texture. Roll and rake, remove ridges, and fill depressions to meet finish grades. Limit fine grading to areas which can be planted within the immediate future. Restore prepared areas to specified condition if eroded or otherwise disturbed after the fine grading and before planting.

8. Before seeding, sodding, or sprigging, fertilizer shall be applied uniformly. For temporary seeding, the rate shall be 10 pounds per 1,000 square feet. For permanent seeding, sodding and sprigging the rate shall be 25 pounds per 1,000 square feet. Fertilizer shall be applied after smooth raking of topsoil and before roller compaction. Do not apply fertilizer at same time or with same machine as will be used to apply seed. Lightly water to aid the dissipation of fertilizer.

C. Sodding:

1. Lay sod to form a solid mass with tightly fitted joints. Butt ends and sides of sod strips; do not overlap. Stagger to offset joints in adjacent courses. Work from boards to avoid damage to subgrade or sod. Tamp or roll lightly to ensure contact with subgrade. Work sifted soil into minor cracks between pieces of sod; remove excess to avoid smothering of adjacent grass.

2. Where sodding is used in drainage ditches, the setting of the pieces shall be staggered, such as to avoid a continuous seam along the line of flow. Along the edges of such staggered areas the offsets of individual strips shall not exceed 6 inches. In order to prevent erosion caused by vertical edges at the outer limits, the outer pieces shall be tamped so as to produce a featheredge effect.

3. Anchor sod on slopes 3:1 or greater with wood pegs as required to prevent slippage. Sod shall be installed with the length perpendicular to the slope. Begin laying sod at the bottom of the slope and work uphill.

4. Any pieces of sod which, after placing, shows an appearance of extreme dryness shall be removed from the work.

5. When sodding adjacent to paving, the top of the sod shall be a minimum of 1-inch and a maximum of 2-inches below the top of the edge of pavement as shown in the City of Tavares Standard Details.

6. After planting is completed, the planted areas shall be sufficiently watered to maintain a moist soil depth of at least 4 inches for the first week.

D. Seeding:

1. Seed shall be applied evenly at a rate of 60 pounds per acre in two intersecting directions, raked into the ground and lightly covered. All grass

seed shall be mixed with soil prior to sowing in a manner insuring an even distribution and retainage of the seed on the site.

2. Upon completion of seeding, apply mulch at a rate of 4,000 lbs/acre. Tack mulch by crimping with crimping attachment. Do not seed areas in excess of that which can be mulched on the same day.

3. After the seed is covered, the area shall be compacted and dressed smooth by a roller not exceeding 112 lbs. Mulch material shall be held in place by covering with light poultry netting staked in place or by a coat of suitable asphaltic material.

4. After planting, apply water with a fine spray immediately after each area has been mulched. Saturate to 4 inches of soil.

5. Cover seeded slopes where grade is four inches per foot or greater with erosion fabric. Roll fabric onto slopes without stretching or pulling. Lay fabric smoothly on surface, bury top end of each section in 6 inches deep excavated topsoil trench. Provide a 2 to 4-inch overlap of adjacent rolls. Backfill trench and fine grade by raking smooth and level with adjacent soil. Secure outside edges and overlaps in accordance with the manufacturer's recommendations. Lightly dress slopes with topsoil to ensure close contact between fabric and soil. At the sides of ditches, lay fabric laps in direction of water flow. Lap ends and edges minimum 6 inches.

E. Hydro-seeding:

1. Apply seeded slurry with a hydraulic seeder at the rate designated on schedule evenly in two intersecting directions.

2. Do not hydro-seed area in excess of that which can be mulched on same day.

3. Apply water with a fine spray immediately after each area has been mulched. Saturate to four inches of soil.

F. Sprigging:

1. Where sprigging is specified in the contract drawings, the entire area shall grassed by planting sprigs endwise in a 2 inch deep trench. The trenches shall be 8 inches apart and sprigs planted 6 inches apart in the trenches. Other methods of planting sprigs that will provide an equal stand of grass may be approved.

1.04 MAINTENANCE

The Contractor shall be responsible to see that all planted areas, including seeded, sprigged and sodded areas, receive sufficient water and maintenance during the life of this contract or until a satisfactory growth of grass is established acceptable to the City or Engineer of Record.

A. To maintain the grassing and sodding, the Contractor shall do the following:

1. The Contractor shall erect barricades, warning signs, and fencing to protect newly planted areas from traffic. Maintain barricade fencing and warning signs throughout the maintenance period.

2. Mow sod to a height of 2 inches as soon as there is enough top growth to cut with mower. Remove no more than 40% of grass leaf growth in initial or subsequent mowing. Do not delay mowing until grass blades bend over and become matted.

3. Maintain lawns by watering, fertilizing, weeding, mowing, trimming, and other operations such as rolling, filling, re-grading, replanting as required to establish a smooth, acceptable lawn, free from eroded or bare areas.

4. Remove weeds by pulling or chemical treatment.

5. Apply the second fertilizer application after the first mowing and when grass is dry.

6. Replant bare areas using same materials specified for lawns.

7. Arrange watering schedule to avoid walking over muddy areas. Use equipment and water to prevent puddling and water erosion and displacement of seed or mulch (if any).

8. Apply water in sufficient quantities and as often as seasonal conditions require to keep the grassed areas moist. It is the Contractor's responsibility to determine the quantities of water required and when to irrigate.

END OF SECTION

SECTION 21
TEMPORARY AND PERMANENT EROSION AND SEDIMENTATION CONTROL

1.01 SCOPE

A. The Contractor shall take every reasonable precaution throughout construction to prevent the erosion of soil and the sedimentation of streams, bays, storm systems, or other water impoundments, ground surfaces, or other property as required by Federal, State, and Local regulations. Within this section various best management practices (BMPs) are presented with instructions for their use, however implementation according to this section is no guarantee of success, nor shall it be a constraint to prevent the use of other more efficient or cost effective measures. Additional resources for BMPs include: The Florida Stormwater, Erosion, and Sedimentation control Inspector's Manual, and FDOT Standard Specifications.

B. The work shown on the approved drawings shall be considered a minimum requirement. What is shown shall not relieve the Contractor of the responsibility to actively take all steps necessary to control soil erosion and sedimentation. The erosion and sedimentation control work includes, but is not limited to the following basic principles:

1. Conduct the earthwork and excavation activities in such a manner to fit the topography, soil type and condition.

2. Minimize the disturbed area and the duration of exposure to erosion elements.

3. Stabilize disturbed areas immediately.

4. Safely convey run-off from the site to an outlet such that erosion shall not be increased off site.

5. Retain sediment on site that was generated on site.

6. Minimize encroachment upon watercourses.

C. <u>Temporary Erosion and Sedimentation Control</u>: In general, temporary erosion and sedimentation control procedures shall be directed toward:

1. Preventing soil erosion at the source.

2. Preventing silt and sediment from entering any waterway if soil erosion cannot be prevented.

3. Preventing silt and sediment from migrating downstream in the event it cannot be prevented from entering the waterway.

D. Permanent Erosion Control: Permanent erosion control measures shall be implemented to prevent sedimentation to the waterways and to prevent erosion to the Project site.

1.02 QUALITY ASSURANCE

A. General: Perform all work under this Section in accordance with all pertinent Federal, State, and Local rules and regulations.

B. Conflicts: Where provisions of pertinent rules and regulations conflict with these Specifications, the more stringent provisions shall govern.

C. The Contractor shall submit a written plan to the City or Engineer of Record for both temporary and permanent grassing. The plan shall include selection of species, dates and rates of application for seeding, fertilizer and mulching and shall be in accordance with Section 20, Grassing and Sodding.

D. The Contractor shall create a regular inspection and maintenance program for all the BMPs implemented.

1.03 MATERIALS

A. Silt Fence shall be a Mirafi silt fence or equal, with FDOT Index #102 filter fabric in accordance with section 985 of the FDOT standard specifications and supported by wood posts as shown in the City of Tavares Standard Details.

B. Floating turbidity barriers shall be in accordance with the City of Tavares Standard Details.

C. Netting shall be ½-inch, galvanized steel, chicken wire mesh.

D. Baled hay or straw in accordance with FDOT Section 104.

E. Grass shall be in accordance with Section 20, Grassing and Sodding.

.

F. Mulch shall be straw or hay, consisting of oats, rye or wheat straw, or a Pangola, Peanut, Bermuda or Bahia grass hay. Mulch shall be free from undesirable weed and other undesirable grasses.

G. Lime shall be Dolomitic Agricultural Ground limestone, in accordance with FDOT Section 982.

H. Filter Fabric shall meet the requirements of FDOT Section 985.

I. Rock Bags shall be placed as shown in the plans, or as directed by the City or City's Representative. Use a fabric material with openings that are clearly visible to minimize clogging yet small enough to prevent rock loss. Use material of sufficient strength to allow removing and relocating bags without breakage. The bag size when filled with rocks shall be approximately 12 by 12 by 4 inches. Use No. 4 or No. 5 coarse aggregate rock.

J. Plywood shall be ¾-inch thick exterior type.

1.04 INSTALLATION

A. General:

1. Permanent erosion and sediment control measures shall be installed and maintained at the earliest practical time consistent with good constructions practices. One of the first construction activities should be the placement of permanent and temporary erosion and sediment control measures around the perimeter of the project or the initial work area to protect the project, adjacent properties and water resources.

2. Temporary erosion and sediment control measures shall be coordinated with permanent measures to assure economical, effective and continuous control through the construction phase. Temporary measures shall not be constructed for expediency in lieu of permanent measures. Temporary measures shall be regularly maintained by the Contractor, after rainfall events the Contractor shall inspect and repair any damage caused during such rainfall event.

3. Construct any stormwater systems required before any building or road construction is started. Protect stormwater system from silting and debris. Protect swale bottom from sealing by excavating all silt deposits during construction and before seeding, mulching and sodding is finished.

4. Avoid dumping soil or sediment into any stream bed, pond, ditch, or watercourse.

5. Maintain an undisturbed vegetative buffer where possible between a natural watercourse and trenching and grading operations.

6. Avoid equipment crossings of streams, creeks, and ditches where practicable.

7. Clearing: The Contractor shall schedule and perform clearing and grubbing in such a manner that subsequent grading operation and erosion control practices can follow immediately thereafter. Excavation, borrow, and embankment operations shall be conducted as a continuous operation. All construction areas not otherwise protected shall be planted with permanent vegetative cover within 30 working days after completion of active construction.

8. Stabilizing: The angle for graded slopes and fills shall be no greater than the angle that can be retained by vegetative cover or other adequate erosion-control devices or structures. All disturbed areas outside of embankment left exposed shall, within 30 working days of completion of any phase of grading, be planted or otherwise provided with either temporary or permanent ground cover, devices, or structures sufficient to restrain erosion.

9. If any earthwork is to be suspended for any reason for longer than 30 calendar days, the areas involved shall be seeded with vegetative cover or otherwise protected against excessive erosion during the suspension period. Suspension of work in any area of operation does not relieve the Contractor of the responsibility for the control of erosion in that area.

B. Temporary Erosion and Sedimentation Control:

1. Temporary erosion and sedimentation control devices shall be installed and maintained from the initial land disturbance activity until the satisfactory completion and establishment of permanent erosion control measures. At that time, temporary devices shall be removed.

2. Temporary erosion and sedimentation control procedures should be initially directed toward preventing silt and sediment from entering waterbodies.

3. The Contractor shall maintain an undisturbed natural buffer, extending a minimal 5 feet from the top of the bank of a waterbody, to filter the run-off. Should this buffer prove infeasible due to construction activities being too close to the creek, or if the amount of sediment overwhelms the buffer, the Contractor shall place silt fences to filter the run-off and, if necessary, take additional measures to stabilize the waterbody banks. When excavation activities disturb the previously stated preventative measures,

or if they are not maintained, or whenever the construction activities cross the waterbodies, check dams shall be installed downstream and within 200 feet of the affected area.

4. Filter fabric, hay bales, or other approved methods shall be placed and secured over the grates of each existing inlet, grating, or storm pipe opening near the area of excavation to prevent silt and debris from entering the storm systems.

5. The Contractor shall use silt fences, hay bales, and floating turbidity barriers as shown on the plans or as directed by the City or Engineer of Record, or as required to restrict movement of sediment from the site

6. The Contractor shall establish vegetative cover on all unpaved areas disturbed by the work in accordance to Section 20, Grassing and Sodding.

7. The Contractor shall use mulch for temporary stabilization of areas subject to excessive erosion and for protection of seed beds after planting where required.

C. Permanent Erosion Control: Permanent erosion control shall include:

1. Permanent erosion control measures shall be implemented as soon as practical after the completion of pipe installation or land disturbance for each segment of the Project. In no event shall implementation be postponed when no further activities related to pipe installation shall impact that portion or segment of the Project. Partial payment requests may be withheld for those portions of the Project not complying with this requirement.

2. Restoring the work site to its original contours, unless shown otherwise on the Drawings or directed by the City or Engineer of Record.

3. Permanent vegetative cover shall be performed in accordance with Section 20, Grassing and Sodding.

1.05 MAINTENANCE AND REMOVAL

A. The Contractor shall maintain all temporary and permanent erosion-control measures in functioning order. Silt dams, silt fences, traps, barriers, check dams, appurtenances and other temporary measures and devices shall be maintained until no longer needed, and shall then be removed. Deteriorated hay bales and dislodged filter stone shall be replaced with new materials. Detention ponds, if constructed, shall be maintained in a condition ensuring that unfiltered water shall

not leave the pond. Grassed areas shall be maintained until completion of the project. Areas which fail to show a suitable stand of grass or which are damaged by erosion shall be immediately repaired. No additional payment shall be made to the Contractor for the re-establishment of erosion-control devices, which may become damaged, destroyed, or otherwise rendered unsuitable for their intended function during the construction of the project.

B. The Contractor shall remove all silt, sediment, and debris buildup regularly to maintain functioning storm systems and erosion-control devices.

C. All erosion and sedimentation control devices, including check dams, shall be inspected by the Contractor at least weekly and after each rainfall occurrence and cleaned out and repaired by the Contractor as necessary.

D. Material from sediment traps shall not be stockpiled or disposed of in a manner which makes them readily susceptible to being washed into any watercourse by runoff or high water.

E. Necessary repairs to erosion and sediment control devices or replacement of erosion and sediment control devices shall be accomplished promptly.

F. Near completion of the project, when directed by the City or Engineer of Record, the Contractor shall dismantle and remove the temporary devices used for sediment control during construction. All erosion-control devices in seeded areas shall be left in place until the grass is established.

G. The Contractor shall clean up all areas at the completion of the project. Any sediment deposits remaining in place after the barriers are no longer required shall be dressed to conform to the existing grade, prepared and seeded in accordance with Section 20, Grassing and Sodding.

END OF SECTION

SECTION 22
MEASUREMENT AND PAYMENT

1.01 SCOPE

A. This section covers methods of measurement and payment for items of work under this Contract.

1.02 MEASUREMENT AND PAYMENT

A. The total Contract Price shall cover all work required by the Contract Documents. All cost in connection with the proper and successful completion of the work, including furnishing all materials, equipment, tools, transportation, overhead, profit, insurance, taxes, and performing all necessary labor and supervision to fully complete the work, shall be included in the unit price and lump-sum bid prices. All work not specifically set forth as a pay item in the Bid Form or Bid Schedule shall be considered a subsidiary obligation of the Contractor and all costs in connection with these subsidiary obligations shall be included in the Bid(s) to provide a complete and functional Project. No additional compensation shall be considered, except for extensions of unit price quantities beyond those shown in the bid or for work classified as authorized supplemental work or change orders. Payment shall not be made for work considered incomplete or unsatisfactory by the City.

B. Except where otherwise specified, the unit price or lump-sum price bid for each item of work which involves excavation, trenching, clearing, grubbing, or disposal of cleared and grubbed materials shall include all costs for such work. No direct payment shall be made for clearing, grubbing, disposal of cleared or grubbed materials, excavation, trenching, trench boxes, shoring or bracing, disposal of surplus excavated material, handling water (and groundwater), and purchasing and hauling of required fill material.

C. <u>Lump Sum</u>:

1. For lump-sum items, payments shall be made to the Contractor in accordance with an accepted Progress Schedule of Values on the basis of actual work completed and accepted by the City at the final acceptance of the Project.

D. <u>Unit Price</u>:

1. For unit price items, payment shall be made based on the actual amount of work accepted by the City and for the actual amount of materials in place

at the final acceptance of the Project, as confirmed by the final measurements.

2. After the work is completed and before final payment is made, the City or Engineer of Record shall make final measurements, with all required assistance from the Contractor, to determine the quantities of various items of work accepted as the basis for the final unit price payment.

E. Payment for Increased or Decreased Quantities:

1. When alterations in the quantities of unit price work not requiring a Change Order(s), as herein provided for, are ordered and performed, the Contractor shall accept payment in full at the Contract unit price multiplied by the actual quantities of work constructed and accepted by the City at the completion of the project.

2. The actual percentage of each lump sum bid item completed by the Contractor and accepted by the City at the final acceptance of the Project shall be paid to the Contractor.

F. Deleted Items:

1. Should any items contained in the Bid Schedule(s) be found unnecessary for the proper completion of the work contracted, the City or Engineer of Record may eliminate such items from the Contract. This action shall in no way invalidate the Contract and no financial allowance or compensating payment for anticipated profit, overhead, etc. shall be made for items so eliminated in making final payment to the Contractor.

G. Partial Payments:

1. Partial payments may be made monthly as the work progresses. Partial payment shall be made subject to the provisions of the General and Supplementary Conditions.

H. Payments for Stored Material Delivered to the Project:

1. When requested by the Contractor and at the discretion of the City, payment may be made for all or part of the value of acceptable materials and equipment to be incorporated into bid items, which have not been used, and which have been delivered to the construction site or placed in storage places acceptable to the City. The Contractor shall provide receipts for all stored material items requested for reimbursement which clearly identify the stored material item, where it is to be constructed, the unit cost

of the item, as well as the total cost of the delivered item(s), the quantity of the item, the brand name of the item, and the supplier. Note that there are additional documentation requirements and storage requirements within the Contract Documents that must also be met before the Contractor can be reimbursed for these stored materials.

2. No payment shall be made for fuels, supplies, installation or connection hardware, lumber, false work, or other similar materials or on temporary structures or other work (items) of any kind which are not a permanent part of the Contract. Items having a value of less than $2,500 shall not be compensated for as a stored material item.

I. Final Payment:

1. If requested by the City or Engineer of Record, the Contractor shall field verify all quantities in dispute by using visual observation, taped measurements, or other methods designated by the City or Engineer of Record. The field verification shall be made in the presence of the City or Engineer of Record and agreed to by both the City or Engineer of Record and the Contractor. The City or Engineer of Record shall prepare a final adjusting Change Order which shall adjust the final quantities of the project Bid Schedule to reflect the actual work accepted by the City and for which the Contractor shall be compensated.

J. Schedule of Values:

1. A schedule of values for the lump-sum bid items and some of the unit price bid items as required by the City or Engineer of Record shall be submitted and accepted before the first pay request is approved by the City or Engineer of Record. The schedule of values shall be based on the prices bid in the Bid Schedule(s). Prices bid in the Bid Schedule(s) cannot be changed in the schedule of values; they can only be broken down into more detail so that the City can more accurately pay the Contractor for the completed work.

K. Pay Item Descriptions:

The descriptions provided in the following paragraphs are to be used by the Bidder in preparing the Bid Schedule(s). They generally indicate how the major workscope items and their respective costs are to be separated into the line items listed in the Bid Schedule(s). These descriptions are not fully representative nor all inclusive of the work required to complete the project in accordance with the Contract Documents. It is the Bidder's responsibility to include all required costs within the most appropriate line item(s).

Item 1. SEWER PIPING: Measurement of new sewers for payment shall be the horizontal distance between manholes with no deduction made for those spaces occupied by manholes, tees or other appurtenances. The depth of cut of sewers shall be measured from existing grade elevations along the center line of the pipe, taken on fifty foot stations, down to the sewer invert elevation. The depth of cut shall be divided into steps: first step - 2 to 4 feet, second step - 4 to 6 feet, and so on, at 2 foot intervals, unless otherwise specified in the Contract Documents. The method of measurement shall be the same for each of the specified pipe materials. Payment for sewers shall be at the unit price stated in the Contract for the size and class of pipe, type of material, and depth of sewer actually installed, measured as previously specified. The unit prices set forth in the Contract shall constitute full compensation for excavation, native soil backfilling, de-watering, bedding, sheeting and shoring of trenches, placing and removing all traffic signs and barriers and maintaining traffic, furnishing, laying, jointing, and testing the sewers plus all incidental work including all labor, materials, tools and equipment. The unit price shall also include stoppers for all ends of pipe and fittings, and transition couplings.

Item 2. GRAVITY SEWER PIPING REMOVAL AND REPLACEMENT: Measurement of remove and replace sewers for payment shall be the horizontal distance between manholes with no deduction made for those spaces occupied by manholes, tees or other appurtenances. The depth of cut of sewers shall be measured from existing grade elevations along the center line of the pipe, taken on 50 foot stations, down to the sewer invert elevation. The depth of cut shall be divided into steps: First step – 2 to 4 feet, second step – 4 to 6 feet, and so on, at 2 foot intervals, unless otherwise specified in the Contract Documents. The method of measurement shall be the same for each of the specified pipe materials. Payment for sewers removal and replacement shall be at the unit price stated in the Contract for the size and class of pipe, type of material, and depth of sewer actually installed, measured as previously specified. The unit prices set forth in the Contract shall constitute full compensation for excavation; native soil backfilling; de-watering; sheeting and shoring driven and pulled and drag shields for trenches of all depths; placing and removing all traffic signs and barriers and maintaining traffic; as-builts; furnishing, laying, jointing and testing the sewers; removal and disposal of the existing sewer pipe; stoppers for all ends of pipe and fittings; transition couplings; bypass pumping plus all incidental work including all labor, materials, tools and equipment.

Item 3. ABANDONMENT OF PIPING BY SEALING: Payment for excavating and sealing ends of abandoned pipe shall be at the unit price set forth in the Contract Documents for each concrete seal actually installed as indicated on the drawings or as directed by the City or Engineer of Record. Payment shall be full compensation for removal of grassing; excavating; sealing; grout/mortar and brick; placing and removing all traffic signs and barriers; maintaining traffic; backfilling and compacting, as required, for a complete abandonment.

Item 4. ABANDONMENT OF PIPING BY PLUGGING: Payment for excavating and plugging ends of abandoned pipe and associated active mains with a plugged fitting shall be at the unit price set forth in the Contract Documents for each plug actually installed as indicated on the drawings or as directed by the City or Engineer of Record. Payment shall be full compensation for removal of grassing; excavating; plugging; placing and removing all traffic signs and barriers; maintaining traffic, backfilling and compacting, as required, for a complete abandonment. The cost associated with valve box and cover abandonment (for grass areas – removal and disposal and backfill of the box void areas; for paved areas – removal and disposal of cover and grout filling valve box) shall not be paid for separately but shall be included in the cost of the associated main to be abandoned.

Item 5. ABANDONMENT OF PIPING BY GROUT FILLING: Payment for excavating and grout filling abandoned mains shall be at the per linear foot unit price as set forth in the Contract Documents. Payment for grout filling sewer laterals shall be included in the per foot price of grout filling gravity sewer main. Payment shall be compensation in full for removal of grassing; excavating as required; grout; grout filling; backfilling and compacting; placing and removing all traffic signs and barriers; maintaining traffic; as required, for a complete abandonment. The cost associated with valve box and cover abandonment (for grass areas – removal, and disposal and soil backfill of the box void areas; for paved areas – removal and disposal of cover and grout filling valve box) shall not be paid for separately but shall be included in the cost of the associated main to be abandoned.

Item 6. SEWER LATERAL PIPING: Measurement of sewer lateral pipe for payment shall be measured by the linear foot on a horizontal plane along the projection of the center line of the lateral pipe, from the center of the sewer main to the terminal point of the lateral pipe, unless specified otherwise in the Contract Documents. Payment for sewer lateral piping shall be at the per linear foot price stated in the Contract for the size, class and type of pipe actually installed. The unit price set forth in the Contract shall constitute full compensation for excavation; native soil backfilling; de-watering; sheeting and shoring driven and pulled and drag shields for trenches of all depths; placing and removing all traffic signs and barriers and maintaining traffic; as-builts; furnishing and installing the sewer lateral piping and fittings; electronic marker (if required); stoppers for future connections plus all incidental work including all labor, materials, tools and equipment.

Item 7. SEWER LATERAL PIPING REMOVAL AND REPLACEMENT: Measurement of sewer lateral pipe removal and replacement for payment shall be measured by the linear foot on a horizontal plane along the projection of the center line of the lateral pipe, from the center of the sewer main to the terminal point of the lateral pipe, unless specified otherwise in the Contract Documents. Payment for sewer lateral piping shall be at the per linear foot price stated in the Contract for the size, class and type of pipe actually installed. The unit price set forth in the Contract shall constitute full

compensation for excavation and native soil backfilling; de-watering; sheeting and shoring driven and pulled and drag shields for trenches of all depths; placing and removing all traffic signs and barriers and maintaining traffic; record drawings; furnishing and installing the sewer lateral piping and fittings; stoppers for future connections P. T. wood markers (new development projects only) and electronic marker (if required);. The unit price shall also be full compensation for locating existing lateral piping; the removal and disposal of the existing sewer lateral piping; locating existing yard piping and connecting to existing yard piping including PVC adapters plus all incidental work including all labor, materials, tools and equipment.

Item 8. LATERAL CONNECTIONS AT SEWER MAIN: Payment shall be made for each sewer lateral connection furnished and installed at the Contract unit price for the type and size of the lateral connection actually installed as shown on the Contract drawings. The unit prices set forth in the Contract shall constitute full compensation for excavation; native soil backfilling; de-watering; sheeting and shoring, driven and pulled; drag shields for trenches of all depths, and furnishing and installing lateral connections of all depths. Payment shall consist of the cost of the tee or saddle, over and above the price paid for pipeline length measured through the tee or saddle. The unit price shall also be full compensation for locating existing lateral piping and all incidental work including all labor, materials, tools and equipment.

Item 9. YARD PIPING SERVICE: Measurement of privately owned sewer service (yard piping) shall be in linear feet measured from the right-of-way line, through private property, to the connection point of the existing yard piping as indicated on the drawings. Payment for yard piping shall be full compensation for excavation; backfilling; furnishing and installing piping; fittings; sleeves; adapters; landscape restoration; concrete and asphalt removal and replacement; clean outs; plugging existing yard piping; locating and connecting to existing yard piping; abandoning existing yard piping; notifying property owner and resident and obtaining a plumbing permit. Payment shall be at the per linear foot unit price as set forth in the Contract measured, as previously specified.

Item 10. FURNISHING AND INSTALLING SEWER FORCE MAINS: The quantity to be paid for shall be the actual number of linear feet of each size, class and type of pipe actually installed. Measurement shall be made along the horizontal projection of the center line of pipe. No deduction in length shall be made for the space occupied by valves or fittings. Payment for the work shall be at the Contract Unit Price shown for each respective item and shall be full compensation for the item of work completed, including all required removal of grassing; excavation; de-watering; native soil backfilling; laying and jointing pipe; pressure and leakage testing; potable water (if required); flushing (if required); furnishing and placing steel decking over excavations; all sheeting, shoring and bracing required to maintain excavations in a safe condition; protecting existing structures, utilities and property both public and private; placing and removing all traffic signs and barriers and maintaining traffic; record drawings; cleaning

up the site; furnishing and installing locate wiring, locate wire test stations, locate wire-related appurtenances and locate wire testing; furnishing all material, labor, tools, and equipment and all incidental and related work required to complete the work of the item. No additional payment shall be made for vertical deflection of the proposed pipeline to accommodate the installation (minimum required cover) of the gate valves, but all costs shall be merged with the associated line item in the Bid Form. Cost incurred by the Contractor to provide 2 inch fittings associated with any 2 inch pipe work shall not be paid for separately, but shall be included in the cost of furnishing and installing the 2 inch piping.

Item 11. FURNISHING AND INSTALLING RECLAIMED WATER PIPELINE: The quantity to be paid for shall be the actual number of linear feet of each size, type and class of pipe actually installed. Measurement shall be made along the horizontal projection of the center line of pipe. No deduction in length shall be made for the space occupied by valves or fittings. Payment for the work shall be at the Contract Unit Price shown for each respective item and shall be full compensation for the item of work completed, including all required removal of grassing; excavation; de-watering; native soil backfilling; laying and jointing pipe; pressure and leakage testing; potable water (if required); furnishing and placing steel decking over excavations; all sheeting, shoring, and bracing required to maintain excavations in a safe condition; protecting existing structures, utilities and property both public and private; placing and removing all traffic signs and barriers and maintaining traffic; cleaning up the site; furnishing and installing locate wiring, locate wire test stations locate wire related appurtenances and locate wire testing; furnishing all material, labor, tools, and equipment; record drawings; and all incidental and related work required to complete the work of the item. No additional payment shall be made for vertical deflection of the proposed pipeline to accommodate the installation (minimum required cover) of gate valves, but all costs shall be merged with the associated line item in the Bid Form.

Item 12. FURNISHING AND INSTALLING PIPE CASING: The quantity to be paid for shall be the actual number of linear feet of each size casing and method of installation actually installed. Measurement shall be made along the horizontal projection of the center line of the casing. Payment for the work shall be made at the Contract Unit Price and shall be full compensation for the items of work, complete, including casing pipe; all casing spacers; pipe joint restraints and total restraining system required on the carrier pipe; locate wiring; excavation; de-watering; placing and removing all traffic signs and barriers and maintaining traffic; record drawings; and all incidental work required to complete the work including all materials, labor, tools and equipment.

Item 13. FURNISHING AND INSTALLING FITTINGS: The quantity to be paid for shall be the actual number of fittings furnished and installed. Payment for the work shall be made at the Contract Unit Price and shall be full compensation for the items of work including furnishing and installing fittings and mechanical restraints at fitting joint,

complete and in place, with all necessary incidental work required to complete the work and all materials, labor, tools and equipment.

Item 14. FURNISHING AND INSTALLING POLYETHYLENE WRAP: The quantity to be paid for shall be in linear feet of polyethylene wrap actually installed. Measurement shall be made along the horizontal project of the center line of the pipe being wrapped including fittings and valves. Payment for the work shall be made at the Contract Unit Price and shall be full compensation for the items of work, complete, including all incidental work required to complete the work and all materials, labor, tools and equipment.

Item 15. FURNISHING AND INSTALLING PIPE SUPPORTS: The quantity to be paid for shall be the actual number of supports furnished and installed. Payment for the work shall be made at the Contract Unit Price and shall be full compensation for the items of work, complete, including furnishing and installing supports, with all incidental work required to complete the work and all materials, labor, tools and equipment.

Item 16. FURNISHING AND INSTALLING PIPE JOINT RESTRAINT: The quantity to be paid for shall be the actual number of bell restraints or D.I.P. joint restraint gaskets (or City approved restraint device from pipe manufacturer), installed as indicated in the City of Tavares Restraint Joint Standard Detail, counted in full 20 foot segments extending from the fitting or for carrier piping bell restraints as required. Payment for the work shall be made at the Contract Unit Price and shall be full compensation for the items of work including furnishing and installing the bell restraint, or D.I.P. joint restraint, complete, with all necessary incidental work required, including all materials, labor and equipment. No payment shall be made for thrust restraints used for the Contractor's convenience in addition to the bell restraints called for in the Restraint Joint Schedules.

Item 17. FURNISHING AND INSTALLING THRUST COLLAR: If thrust collar (dead man) is used instead of bell restraints, tie rods to length indicated on the in the City of Tavares Restraint Joint Standard Detail on dead end pipelines, payment shall be for each thrust collar installed (by size of pipe).

Item 18. FURNISHING AND INSTALLING VALVES: The quantity to be paid shall be the actual number of units of each size and type valve furnished and installed. Payment for the work shall be made at the Contract Unit Price and shall be full compensation for the item of work including furnishing and installing the valve, complete, with all required excavation and backfill, necessary jointing, adapter pieces, blind flanges (if required), concrete supports (if applicable), mechanical restraints at valve; nuts, bolts, socket clamps, sleeves; valve box and cover, valve tags, valve keys, valve stem extension (if applicable), tracing wire, debris shield, placing and removing all traffic signs and barriers and maintaining traffic, furnishing all material, labor, tools and equipment, flushing, performing hydrostatic and leakage testing, ground surface

restoration, and all incidental and related work required to complete the item. For HDPE installations, payment shall also include mechanical or flange connection joint adapters and associated electro-fused couplings.

Item 19. FURNISHING AND INSTALLING TAPPING SLEEVES AND VALVES: The quantity to be paid for shall be the actual number of units of each size furnished and installed. Payment for the work shall be made at the Contract Unit Price for each respective item and shall be full compensation for the item of work, complete, with all necessary excavation and backfill; jointing; adapter pieces; concrete supports (if applicable), mechanical restraints at valve; nuts, bolts, socket clamps, sleeves; valve box, valve box extension (if applicable) and valve box cover; debris shield; placing and removing all traffic signs and barriers and maintaining traffic; record drawings; furnishing all material, labor, tools and equipment; performing flushing and hydrostatic and leakage testing and all incidental and related work required to complete the item. For HDPE installations, payment shall also include mechanical or flange connection joint adapters and associated electro-fused couplings.

Item 20. FURNISHING AND INSTALLING VALVES OR FITTINGS IN EXISTING PIPELINES: The quantity to be paid shall be the actual number of each size and type valve or fitting furnished and installed. Payment for the work shall be made at the Contract Unit Price for each respective valve and shall be full compensation for the item of work, complete, including all required excavation; backfill; shutting down and de-watering the pipelines; bypass pumping; cutting openings in the pipelines to accept the new valve or fitting and removing, stockpiling or otherwise disposing of the existing pipe section or existing valve or fitting removed; furnishing and installing the new valve or fitting; furnishing and installing all necessary pipe, couplings, sleeves, pipe adapters, concrete supports, mechanical restraints on valve or fitting, nuts, bolts, glands, socket clamps; furnishing and installing access box and cover; valve box extension (if applicable); furnishing all material, labor, tools, and equipment; and all incidental and related work required to complete the work of the item.

Item 21. FURNISHING AND INSTALLING AIR VALVES: The quantity to be paid shall be the actual number of air valve assemblies (as detailed) furnished and installed. Payment shall be made at the Contract Unit Price for each air valve assembly in manhole (and not in manhole) and shall be full compensation for the item of work, complete, including all excavation; backfill; tapping or cutting opening in pipelines; furnishing and installing air valve with all required appurtenances, manhole with specialty liner, frame and cover or aluminum door, all piping fittings and valves (gate, corp. stops, etc.) between air valve and main, saddle, sleeve or Tee fitting in main, all material, labor, tools and equipment and all incidental and related work to complete the air valve assembly and associated piping between the air valve and the main.

Item 22. MANHOLES: Manholes shall be paid per foot of depth at the respective manhole diameter unit price. The price shall include the cost of necessary excavation,

backfill, table and invert, castings, steps, frames and covers, testing and incidental work required for satisfactory installation of the manhole. Depth of Manholes shall be paid for at the unit price per foot measured from the invert at the center of manhole to the bottom of the frame, and shall include the cost of necessary excavation and incidental work necessary of complete installation of manholes.

Item 23. INSIDE MANHOLE DROPS shall be paid for at the unit price for each drop manhole. The price shall include the cost of the manhole pipe, fittings and straps.

Item 24. TIE-INS: Tie-ins to Existing Manholes shall be paid per occurrence and include all work necessary to excavate, break into existing manhole, rebuild invert, regrout manhole walls and other incidental work necessary for satisfactory connection to the existing system.

Item 25. SUBMERSIBLE SEWAGE PUMPING STATIONS: The Contractor's lump sum bid shall constitute full compensation for the work necessary for satisfactory completion of pump station as shown on the contract drawings, including, but not limited to, wet well, pumps, standby power generator if applicable, piping, electrical and controls, security fencing of the construction area, tree removal, clearing and grubbing as required, grassing of disturbed areas, reinforced concrete driveway and site slab, all electrical conduit and service conductor to the service pole unless other established/indicated boundary is indicated. Lump sum price includes the work and improvements inside the landscape zone and those items listed above which are outside the landscape zone (including driveway, sod work, underground, power conduit, water service and associated service piping, etc.).

Item 26. JACK AND BORE MOBILIZATION AND SETUP: Jack-and-bore mobilization and set up shall only be paid for 6-inch-diameter and larger carrier pipe. Only one Jack and Bore Mobilization and Setup Bid Unit Price shall be paid for each road crossing actually constructed. The Contractor shall furnish all labor, materials, equipment, and services necessary to complete the jack-and-bore mobilization and set up for the jack and bores as shown on the plans in accordance with the Contract Documents, including but not limited to mobilization, jacking pits as required on each side, dewatering, any temporary fencing, excavation, backfill, compaction, grading, testing, sodding/seeding.

Item 27. JACK AND BORE: The Contractor shall be paid for each linear foot of carrier casing installed complete. The Contractor shall furnish all labor, materials, equipment, and services necessary to complete the jack-and-bore crossings as shown on the plans in accordance with the Contract Documents, including but not limited to casing pipe, casing spacers, end seals, and installing carrier pipe in the casing.

Item 28. DIRECTIONAL DRILLING HDPE LINE: The quantity to be paid for shall be the actual number of linear feet of each size and class of pipe actually installed

and tested complete. The Contractor shall furnish all labor, materials, equipment, and services for constructing and placing into operation the horizontal directional drill (HDD) installed as shown on the plans or as otherwise specified in accordance with the Contract Documents, including but not limited to bore pits, pipe, bore, reaming, back-reaming, slurry, slurry relief holes, installing the pipe in the bore, connections, fittings and transition couplings, HDPE reducers, removing or avoiding obstructions in the path of the HDPE pipe, excavation, backfill, compaction, sodding/seeding, dirt drive restoration, testing, and all associated appurtenances. Concrete, asphalt, or limestone repairs required for the HDD installation shall be paid under their corresponding Bid Unit Price items.

Item 29. ASPHALT CONCRETE RESTORATION: The Contractor shall be paid for each square yard of asphalt concrete restoration installed complete as measured in place. The Contractor shall furnish all labor, materials, equipment, and services for constructing the asphalt restorations as shown on the plans in accordance with the Contract Documents, including but not limited to removing and disposing of existing asphalt, surface preparation, earth work, grading, fill, backfill, prime and tack coats, leveling (where required), asphalt pavement, striping, marking, reflectors, and related appurtenances to the satisfaction of the City and permitting agencies. Trench width shall be paid according to the Specifications and detail widths.

Item 30. MILLING ROADWAY: The Contractor shall be paid for each square yard milled complete as agreed in writing before the work shall begin. The Contractor shall furnish all labor, materials, equipment, and services for milling the existing asphalt roadway surface as shown on the plans in accordance with the Contract Documents and as directed in writing by the City or Engineer of Record, including but not limited to milling or grinding of the road surface to a minimum depth of 1 inch or as shown on the drawings, removing and disposing of existing asphalt, surface preparation, sweeping, and related appurtenances, all MOT plan and FDOT permit requirements, flagmen, jersey concrete barriers, signage, temporary facilities, and local notifications to the satisfaction of the permitting agencies. Asphalt areas or paved areas that are removed for pipe installation shall not be paid for milling.

Item 31. ASPHALT CONCRETE OVERLAY: The Contractor shall be paid for each square yard of asphalt concrete overlay installed complete. The Contractor shall furnish all labor, materials, equipment, and services for constructing the asphalt overlay as shown on the plans in accordance with the Contract Documents and as directed in writing by the City or Engineer of Record, including but not limited to surface preparation, temporary pavement, prime and tack coats, leveling (where required), asphalt pavement, base course, stabilization, any MOT plan and FDOT permit requirements, flagmen, jersey concrete barriers, signage, temporary facilities, local notifications, concrete paving, excavation, backfill, compaction, striping, marking, reflectors, and related appurtenances, to the satisfaction of the City and permitting agencies.

Item 32. CONCRETE RESTORATION: The Contractor shall be paid for each square yard of concrete restoration installed complete. Curbing shall be paid 1 SY for each 3 LF repaired. The City shall not pay for curbing or sidewalk that the Contractor could have saved using reasonable care and precautions. The Contractor shall furnish all labor, materials, equipment, and services for constructing the concrete pavement, pavers, brick pavement, sidewalks, and curbing restorations as shown on the plans in accordance with the Contract Documents, including but not limited to removing and disposing of existing materials, surface preparation, earthwork, grading, fill, backfill, reinforcement, concrete, pavers, brick, testing, and all associated appurtenances. The Contractor shall match the existing grade, thickness, reinforcing, and finishes.

Item 33. RECORD DRAWINGS: Once the Record Drawings have been determined to be complete according to the Specification requirements, the entire unit price shall be paid to the Contractor. The Contractor shall furnish all labor, materials, equipment, and services for composing and providing Record Drawings in accordance with the Contract Documents, including but not limited to updating the electronic copy of the Drawings, identifying items that were revised during the project or addenda, having all Drawings signed and sealed by a Florida-certified professional engineer or land surveyor, and providing signed and sealed paper copies of the Record Drawings.

Item 34. GRANULAR BACKFILL: The quantity of granular material and AASHTO A-3 soil used for backfill (including bedding) below and/or above the normal grade measured for payment shall be the same as the number of cubic yards of unsuitable material ordered removed. Computation shall be based on applicable trench sections as specified below. Length shall be equal to the horizontal distance between vertical planes representing the average ends of the granular materials as placed in the trench, or to pay line limits of an intermediate structure as shown on the Contract Drawings or as required and to a depth equal to the average depth of the unsuitable material removed. Computation shall be based on computed volume of unsuitable material ordered removed, less the volume associated with any utility mains over 12 inch diameter. Native material suitable for use as backfill shall be separated from unsuitable material and stockpiled for use on the Project. No measurement for payment shall be made outside of the pay line width. Actual trench dimensions less than defined as maximum herein, shall be used when applicable. Unless approved otherwise by the City or Engineer of Record, the quantity calculation for granular material and A-3 soil utilized for the roadway construction (sub-base, and base) shall be excluded (temporary and/or permanent use) from this pay item.

a. For excavations 5 feet or less in depth and pipe diameters of 4 inch and greater shall be based on vertical side walls, maximum trench width of 3 feet for pipe diameters up to 12 inch. For pipe diameters larger than 12 inches, trench width shall be the pipe diameter plus 2 feet, in 6 inch increments. Trench width for pipe diameters smaller than 4 inch shall be 2 feet with vertical side walls.

b. Excavations greater than 5 feet in depth, where no trench box or other protection is used, shall be based on trench bottom width equal to the pipe diameter plus 2 feet, in 6 inch increments, minimum width shall be 3 feet. Trench side walls shall be vertical from the trench bottom to a height of 5 feet. Remaining trench wall shall be sloped to grade 1 to 1.5, vertical to horizontal.

c. Excavations greater than 5 feet in depth and utilizing a trench box shall have a maximum trench box width of 8 feet. Trench side walls shall be vertical from the trench bottom to a height of 5 feet, or top of trench box, whichever is greater. The remaining trench wall shall be sloped to a grade of 1 to 1.5, vertical to horizontal.

d. When roadway replacement is indicated, unsuitable fill material replacement measurement for roadway bedding shall be made for a cross section 2 feet below the sub-grade and extending to 1 foot beyond outside edge of pavement or curbing. Applicable trench section widths, as specified herein, shall be measured below the roadway bedding.

e. Maximum measurement for unsuitable fill material disposal and replacement for structures shall be based on an excavation extending 3 feet from the outside wall or bottom slab projection of the structure. Unprotected excavation walls shall be vertical from the bottom of the structure to a height of 5 feet. Remaining trench wall shall be sloped to grade 1 to 1.5, vertical to horizontal.

f. Granular material used to backfill unauthorized excavation or for any temporary drainage proposed shall not be measured for payment.

g. The unit price per cubic yard as set forth in the Contract for AASHTO Class A-3 soil used as backfill shall constitute full compensation for removal from the job site and disposal of all unsuitable material and furnishing, placing and compacting backfill as specified herein. The cost of excavation of unsuitable backfill and de-watering shall be included with the regular cost of pipe installation.

Item 35. FLOWABLE BACKFILL: Flowable fill in accordance with FDOT Index 307 shall be used as backfill as noted on the drawings or in accordance to FDOT permit conditions, and shall be paid for at the unit price allowed in the bid form for flowable fill. Flowable fill shall be measured in cubic yards. Flowable fill used to backfill in areas unauthorized by the City shall not be measured for payment. The unit price per cubic yard as allowed in the bid form for flowable fill used as backfill shall constitute full compensation for removal and disposal of material from the project site, and includes

furnishing and installing flowable fill, complete with temporary backfill and steel plates covering the trench. The maximum quantity of flowable fill used for backfill for utilities shall be computed based on the limits as shown on the drawings or, if no limits noted, on the trench configuration outlined in the measurement and payment Item 37, Granular Backfill, less the volume associated with any utility mains.

Item 36. GRASSING: The unit price per square yard as set forth in the Contract for sodding, sprigging or seeding and mulching shall constitute full compensation for furnishing and installing, fertilizing and maintaining, the sodding, sprigging or seeding and mulching. If a planted area must be replanted due to the Contractor's negligence, excessive amount of damage for type of construction, or failure to provide routine maintenance of the area, such replacement shall be at the Contractor's expense.

Item 37. EXISTING PAVEMENT – ASPHALT OVERLAY: Measurement shall be made for the actual square yards of asphalt overlay installed (minimum of 1 inch final overlay thickness). Payment shall be made for the actual square yards of asphalt installed and shall be full compensation for the asphalt paving installed complete including all temporary and permanent pavement markings; placing and removing all traffic signs and barriers; maintenance of traffic (MOT); cleaning up the site and furnish all labor, material and equipment. Required thickness of asphalt shall be 1-inch final overlay thickness (minimum) unless noted otherwise on the contract documents or drawings.

Item 38. EXISTING PAVEMENT – MILLING AND RESURFACING: Milling and resurfacing of asphalt surfaces shall be performed with prior approval of the city, and in accordance with the City of Tavares Standards or the Florida Department of Transportation Standard Specifications and Details. Measurement shall be the amount of square yards to be milled and resurfaced within the limits shown on the drawings. Payment shall be for the actual number of square yards of asphalt surface that is milled and replaced with new asphalt mix (1 inch minimum thickness) including all temporary and permanent pavement markings (MOT), markers, signing, delineators, buttons, stripe, placing and removing all traffic signs and barriers, maintenance of traffic, clean up at the site and furnishing all labor, material and equipment.

Item 39. REMOVAL OF SIDEWALK: Payment for the removal of sidewalk shall be at the square yard unit price set forth in the Contract Documents and shall include and be full compensation for complete removal and disposal of sidewalk, including handicap ramps, placing and removing all traffic signs and barriers and maintaining traffic. Payment for sidewalk removal shall be the actual square yards of sidewalk removed with a maximum corresponding to the nearest construction joint unless indicated otherwise.

Item 40. REMOVAL OF DRIVEWAY: Payment for the removal of driveway shall be at the square yard unit price set forth in the Contract Documents for either asphalt or concrete driveway removal. Payment shall include and be full compensation for complete removal and disposal of driveway including placing and removing all traffic signs and

barriers and maintaining traffic. Payment for driveway removal shall be the actual square yards of driveway removed with a maximum corresponding to the nearest construction joint unless indicated otherwise.

Item 41. REMOVAL OF CURB AND GUTTER: Payment for the removal of curb and gutter shall be at the linear foot unit price set forth in the Contract Documents and shall include and be full compensation for complete removal and disposal of curb and gutter including placing and removing all traffic signs and barriers and maintaining traffic. Payment for curb and gutter removal shall be the actual linear feet of curb and gutter removed with a maximum corresponding to the nearest construction joint unless indicated otherwise.

Item 42. INSTALLATION OF SIDEWALK: Payment for the installation of sidewalk (including handicap ramps) shall be at the square yard unit price set forth in the Contract Documents and shall include preparation and construction of new sidewalk including forming and vibrating (if required), placing and removing all traffic signs and barriers and maintaining traffic. Payment for the sidewalk shall be the actual square yards of sidewalk installed with a maximum corresponding to the nearest construction joint unless indicated otherwise. Sidewalk installation shall include handicap ramps. No separate pay item for construction of handicap ramps. No payment shall be made for sidewalk through concrete driveways.

Item 43. INSTALLATION OF DRIVEWAYS: Payment for the installation of driveways shall be at the square yard unit price set forth in the contract documents for the type of driveway to be installed. If directed by the City or Engineer of Record, the contractor shall furnish and install a concrete apron for all existing dirt and aggregate driveways. Payment shall include preparation and construction of driveway including forming and vibrating (if required), placing and removing all traffic signs and barriers and maintaining traffic. Payment for driveway shall be the actual square yards of each type of driveway installed with a maximum corresponding to the nearest construction joint unless indicated otherwise or as directed by the City or Engineer of Record.

Item 44. INSTALLATION OF CURB AND GUTTER: Payment for the installation of curb and gutter shall be at the linear foot unit price set forth in the contract documents for the type of curb and gutter to be installed. Payment shall include preparation and construction of curb and gutter including forming and vibrating (if required), placing and removing all traffic signs and barriers and maintaining traffic. Payment for curb and gutter shall be the actual linear feet of each type of curb and gutter installed with a maximum corresponding to the nearest construction joint unless indicated otherwise.

Item 45. FENCING: Payment shall include removal and disposal of existing fencing system (if applicable); the furnishing, preparation and installation of new fence and gates as required in the Contract Documents. Payment for fencing shall be the actual linear feet of each size and type of fencing installed as indicated on the Contract

Documents. Payments for gates shall be at the unit price for each size and type actually installed as indicated on the Contract Documents.

Item 46. CONNECTION TO EXISTING SEWAGE MANHOLE: Payment for standard connections, drop connections, service lateral connections and force main connections to existing manholes shall be at the unit price set forth in the Contract for the size and type of connection. The unit price shall constitute compensation in full for each connection actually furnished and installed including excavation; native soil backfill; compaction; coring; piping; fittings; rubber boot or sand sleeve; grouting and repair to existing manhole wall section; placing and removing all traffic signs and barriers and maintaining traffic plus all incidental work including all labor, materials, tools and equipment.

Item 47. GENERATOR AND ELECTRICAL FACILITIES: The Contractor shall furnish all labor, materials, equipment, and services for constructing and placing into operation the generator, automatic transfer switch, fuel tank, transformers, electrical power service, electrical shown on the plans in accordance with the Contract Documents, including but not limited to all electrical wires, conduit, duct banks, instrumentation, SCADA system, telemetry path study (if applicable), site lighting, controls, testing, and related appurtenances. The Contractor shall be paid by the lump sum for the generator and electrical facilities installed complete.

END OF SECTION

SECTION 23
WARRANTY

1.01 GENERAL WARRANTY FOR TWO YEARS AFTER COMPLETION

A. Warranty shall be provided to the City at the time of final acceptance.

B. For a period of at least two years after final acceptance, the Contractor warrants the fitness and soundness of all work done, materials, and equipment put in place under the contract including manufacturing and/or design inadequacies, materials, and workmanship not in conformity with the contract documents, improper assembly, hidden damage, failure of devices and/or components, excessive leakage, or other circumstances which would cause the equipment failure under normal design and/or specific operating conditions.

C. In addition, the City shall be provided five-year warranties on all equipment such as pumps, motors, electrical panels, etc., by the manufacturer prior to final acceptance by the City.

D. Warranties shall be extended by six months from the date of any repair to warranted items.

E. Neither the final certificate of payment nor any provision in the contract documents nor partial or entire occupancy of the premises by the City shall constitute an acceptance of work not done in accordance with the contract documents or relieve the Contractor of liability in respect to any express warranties of responsibility for faulty materials or workmanship.

F. The Contractor shall replace and install each piece of equipment, device, or component which shall fail within the above specified term of the guarantee with reasonable promptness without increase in the Contract Price. If the Contractor fails to proceed promptly to comply with the terms of the guarantee, the City may have the defects corrected and the Contractor and his/her Surety shall be liable for all expenses incurred, or the City may issue a claim against the Contractor's Bond. In some instances, if approved by the City, the Contractor may be allowed to repair the equipment.

G. As part of the guarantee, the Contractor shall compile, verify compliance with the Contract documents, and submit two copies to the City of the warranties, bonds, and service and maintenance contracts executed by each of the respective manufacturers, suppliers, and subcontractors. The submittal of warranties, bonds, and service and maintenance contracts shall be included in submittals for review and before final acceptance and shall include:

1. Table of Contents: Neatly typed, in sequence of the Specifications. Provide completion information for each item as follows:

   a. Product or work item.

   b. Firm, address, telephone, fax and E-mail number, and name of principal.

   c. Scope.

   d. Date of beginning of warranty, bond, or service and maintenance contract.

   e. Duration of warranty, bond, or service and maintenance contract.

   f. Provide information for City's personnel:

      (1) Proper procedure in case of failure.

      (2) Instances that might affect the validity of warranty or bond.

   g. Contractor, with address, telephone, faxes and E-mail numbers, and the name of responsible principal.

H. A second City inspection shall be conducted 10 months after the date of final acceptance. The Contractor shall be notified of observed defects after the "10-month" inspection is conducted. The contractor shall promptly correct any defects.

I. If in fulfilling the requirements of the contract or of any guarantee embraced therein or required thereby, the Contractor disturbs any work guaranteed under another contract, the Contractor shall restore such disturbed work to a condition satisfactory to the City, and shall guarantee such restored work to the same extent as it was guaranteed under such other contract.

1.02 MAINTENANCE

A. In addition to the guarantee stipulated in the Contract, the Contractor shall fully maintain all work performed under the contract for sixty (60) days after final completion and acceptance of the work. The retained percentage of contract payments shall not be due until after the 60 days maintenance period, except that the City may at their discretion release such retainer earlier.

END OF SECTION

SECTION 24
RECORD DRAWINGS

1.01 SCOPE

A. This Section details the minimum requirements for the Contractor for maintenance and recording of Record Documents.

1.02 GENERAL

A. Upon completion of the Work and prior to dedication of utilities to the City or final payment under the Contract with the City, Contractor shall furnish to City an electronic file, three reproducible paper sets, signed and sealed, of the Record Drawings which have been (re-drawn) revised to scale to indicate final data for record (true to scale) and in accordance with all addenda, change orders, supplemental work authorizations, and all requirements with respect to the drawings specified herein. Simply changing a station-and-offset note or just adding notes is not acceptable. A set of paper or an electronic file of the original Project drawings shall be furnished to Contractor for this purpose. Revisions and recording of information on the paper shall be done in ink to scale or by revision of the electronic files by a competent drafter. Electronic files shall be printed on paper and shall conform to the requirements of this section. If the Contractor desires to have the paper or disk furnished to Contractor prior to starting the Work or at a specific time during the progress of the Work, the Contractor should so inform the City. Record information shall be recorded and kept current during the progress of the Work.

1.03 SUBMITTAL

A. <u>General</u>:

1. The Contractor shall submit (3) three print sets of Record Drawings labeled Record Drawings in 1" high printed letters on 24" X 36" paper and an electronic AutoCAD2007 (or higher format) file on a CD.

2. Record Drawings shall be maintained in a clean, dry, and legible condition. Record Drawings shall not be used for construction purposes. The Contractor shall store documents and samples in the Contractor’s field office apart from documents used for construction and shall do the following:

   a. Provide files and racks for storage of documents.

b. Provide cabinet or secure storage space for storage of samples.

3. The Contractor shall institute a computerized record control program.

4. The Contractor shall make documents and samples available at all times for inspection by the City and Engineer of Record.

5. At Contract closeout, the Contractor shall transmit the final (City approved) Record Drawings and samples with cover letter to the City or Engineer of Record, listing the following:

   a. Date of submittal
   b. Project title and number
   c. Contractor's name and addresses
   d. Number and title of each Record Drawing
   e. Signature of Contractor or its authorized representative
   f. Contract Section and Subsection numbers
   g. Location

6. The Contractor shall record construction information as follows:

   a. Record and update daily Record information from field notes on a set of opaque drawings and to the satisfaction of the City.

   b. Provide felt tip marking pens, maintaining separate colors for each major system, for recording information.

   c. In making changes to the drawings, utility lines to be changed shall be erased before new lines are drawn, notations to be changed shall be reworded as required. Lines, notations or required information not affected by addenda, change orders, or supplemental work authorizations shall not be disturbed. The legend used on the original Project drawings shall also be used to make all necessary corrections.

   d. The State Plane Coordinate System using the Florida East Zone and the North American Datum of 1983 is preferred for horizontal data; while NGVD 1929 is preferred for elevation data. Other coordinate systems and datum(s) may be used, but must be conspicuously noted on the Record Drawings.

7. The final Record Drawings shall include all changes in the work including verbal field changes, addenda, change orders, supplemental work

authorizations and other City directives. Mark Record Drawings to reflect the following:

a. Record Drawings shall contain a vicinity map and street names shall be shown for all streets and right-of-ways.

b. Measured horizontal and vertical locations of underground utilities and appurtenances referenced to permanent surface improvements.

c. Measured locations of internal utilities and appurtenances concealed in construction, referenced to visible and accessible features of construction.

d. All wastewater and reclaimed water facilities shall be located in two directions. One location shall be referenced perpendicular to the right-of-way line. The other location shall be parallel to the item being located and shall be referenced to the right-of-way line. Centerline intersections of pavement, curb, sidewalk or utility structures are not acceptable unless these are in turn referenced to right-of-way lines. Centerline of right-of-way may be used for reference in lieu of the right-of-way line. A project base line shall be completely defined and shall be centered in the right-of-way, where possible. Stationing may be used as an alternative providing the point of beginning is referenced to an existing right-of-way line that is shown on the drawings. A “point of beginning” and City easements shall be defined from a known city block corner as defined in the City’s land base maps and tied to lot/property corner. A single lot survey shall include the lot address. The horizontal and vertical datum referenced shall be clearly stated on the Record Drawings.

e. GPS data points may be used in lieu of or in addition to station and off-set data, at the option of the contractor/surveyor. GPS coordinates shall be provided of Third Order Class I survey accuracy or 50 cm (1.64 foot) positional accuracy. Should you have any questions regarding the GPS data, contact the City’s GIS/CAD Standards Department

f. Field changes of dimension and detail.

g. Details not on original construction drawings.

h. Changes made by change order or supplemental work authorizations.

i. The Contractor shall have the Licensed Land Surveyor certify the Record Drawings as being correct and complete.

j. Gravity Sewers:

(1) The location of all piping, fittings, valves, manholes, cleanouts, points of deflection, and points of connection to the existing system shall be referenced in two perpendicular directions.

(2) Horizontal dimensions shall be to the nearest tenth of a foot and vertical dimensions shall be to the nearest hundredth of a foot.

(3) Runs of gravity sewers shall be identified (i.e., 300' of 8" PVC SDR35 at S=.004.).

(4) Elevations shall be given for the north rim of the top of all manhole covers and all manhole inverts.

(5) Elevations on the service piping and finished grade shall be required at the property line for only those sewer service laterals which result in more than 60 inches of cover or less than 30 inches of cover (these exceptions must be City approved)

(6) For sewer service laterals which are totally perpendicular to the main, the location of the end of sewer services shall be given to the plug and be located from the side property line or by station and offset. For sewer service laterals, which include bends and off-sets which result in a service which is not totally perpendicular to the main, for these cases, the location of all fittings between the sanitary tee and the plug (at the property line) shall be provided.

(7) All Service Connections shall be measured from the downstream manhole. Each stub-out shall be accurately referenced to the center of the manhole, and the actual invert elevation of each end of the stub out shall be accurately recorded. For service connections not located perpendicular to the main, locate the end of the service from two property corners.

k. Force Mains and Reuse Mains

(1) The location of valves, fittings, casings and points of connection to the existing system shall be referenced in two perpendicular directions.

(2) Horizontal dimensions shall be to the nearest tenth of a foot and vertical dimensions shall be to the nearest hundredth of a foot.

(3) Horizontal locations shall be required perpendicular to the right-of-way at 100' intervals.

(4) Elevations on the main and finished grade shall be required at points of connection to the existing system, fittings (bends, valves, tees, plugs, etc.), 500' intervals, at high points, and where the standard depth of cover is not provided.

l. Pumping Stations

(1) Wet well size and location shall be indicated and located to property lines and/or right-of-way lines.

(2) All lines within the pump station site shall be located to property lines and/or right-of-way lines.

(3) Elevations shall be indicated at inverts, wet well top and bottom, and at ground adjacent to wet well. All types and sizes of lines and fittings shall be indicated.

(4) All schedules that show pump, motor and electrical data shall be corrected to show the as-built condition and submitted with the pump station drawings.

(5) As-built information should be provided for the pump station site plan. Within the pump station boundaries the following shall be located horizontally: pump-out, water spigot and cross-connection control device, wet well, control panel, bends, fittings, manholes, generator and fuel tank (if applicable), transformer, irrigation system, fence, and auxiliary electrical enclosures, as applicable.

(6) The Contractor shall provide a boundary survey of the pump station site showing above and below ground improvements. This survey and sketch shall be prepared by a registered land surveyor in accordance with Chapter 472 of the Florida Statutes. The sketch shall be submitted with as-built drawings prior to final payment.

(7) All buried electrical conduit shall be labeled and located to property lines and/or right-of-way lines including electrical service from utility transformer to station meter and to control panel.

1.04 CERTIFICATION

A. Each page of the Record Drawings shall bear the name, date and original signature of the general contractor responsible for the Work and the name, date and original signature and seal of the registered land surveyor or registered professional engineer who provided the horizontal and vertical dimensions and elevations on the Record Drawing. The signatures shall certify that the Record Drawings do, in fact, reflect the true as-built conditions as located under the direct supervision of the registered surveyor and/or professional engineer. The drawings shall be certified using the form provided by the City (see the end of this Section). The City shall review and approve a preliminary set of project Record Drawings. The Contractor shall make all appropriate changes to the Record Drawings to comply with these requirements.

B.

RECORD DRAWING	
INFORMATION PROVIDED BY:	
Date:	
Name:	
Address	
Phone#:	
IN ACCORDANCE WITH CHAPTERS 471 AND 472 OF FLORIDA STATUTES AND CHAPTER 61G15-23 OF THE FLORIDA BOARD OF PROFESSIONAL ENGINEERS, I HEREBY CERTIFY THAT THE	
Chilled Water	
Pavement	Water Main
Curb & Gutter	Reclaimed Water Main
Storm & Drainage System	Force Main
Lake or Pond	Sanitary Gravity System
Underdrain Connections	Lift Station
ARE AT THE HORIZONTAL AND VERTICAL LOCATIONS AS SHOWN ON THESE “RECORD DRAWINGS.”	
SIGNATURE:	
NAME:	
FLORIDA PROFESSIONAL ENGINEER NO.:	

C.

RECORD DRAWINGS	
INFORMATION PROVIDED BY:	
Name:	
Address	
Phone#:	
I HEREBY CERTIFY THAT THE	
Chilled Water	
Pavement	Water Main
Curb & Gutter	Reclaimed Water Main
Storm & Drainage System	Force Main
Lake or Pond	Sanitary Gravity System
Underdrain Connections	Lift Station
ARE AT THE HORIZONTAL AND VERTICAL LOCATIONS AS SHOWN ON THESE “RECORD DRAWINGS” AND MEET THE MINIMAL TECHNICAL STANDARDS SET FORTH BY THE FLORIDA BOARD OF PROFESSIONAL SURVEYOR’S AND MAPPERS IN CHAPTER 61G17-6, FLORIDA ADMINISTRATIVE CODE, PURSUANT TO SECTIONS 471 AND 472 OF FLORIDA STATUTES.	
DATE OF FIELD SURVEY	
SIGNATURE	
NAME:	
FLORIDA REG. LAND SURVEYOR’S NO.:	

APPENDIX A

STANDARD CITY DETAILS

GENERAL DETAILS

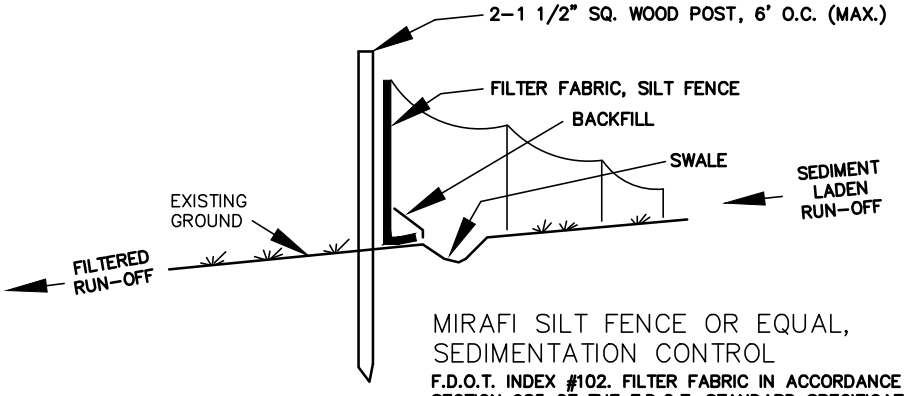

MIRAFI SILT FENCE OR EQUAL, SEDIMENTATION CONTROL

F.D.O.T. INDEX #102. FILTER FABRIC IN ACCORDANCE WITH SECTION 985 OF THE F.D.O.T. STANDARD SPECIFICATIONS.

NOTES:

1. TEMPORARY EROSION CONTROL STRUCTURE TO BE UTILIZED DURING CONSTRUCTION AT AREAS DESIGNATED BY ENGINEER OR AREAS ON-SITE WHERE UNSTABILIZED GRADES MAY CAUSE EROSION PROBLEMS. EROSION CONTROL STRUCTURE MAY BE REMOVED AFTER UPSLOPE AREA HAS BEEN STABILIZED BY SOD, OR COMPACTED AS DETERMINED BY CONTRACTOR.

2. CONSTRUCT STORMWATER SYSTEMS BEFORE ANY BUILDING OR ROAD CONSTRUCTION IS STARTED.

   a.) PROTECT SYSTEM FROM SILTING AND DEBRIS BY METHODS PROVIDED IN DETAILS.

   b.) PROTECT SWALE BOTTOM FROM SEALING BY EXCAVATING ALL SILT DEPOSITS DURING CONSTRUCTION. THIS SHALL BE DONE BEFORE SOD & SEEDING & MULCHING IS FINISHED

EROSION CONTROL STRUCTURE

NOT TO SCALE

THE FOLLOWING LIST REPRESENTS A BASIC EROSION AND SEDIMENT CONTROL PROGRAM WHICH IS TO BE IMPLEMENTED TO HELP PREVENT OFF-SITE SEDIMENTATION DURING AND AFTER CONSTRUCTION OF THE PROJECT.

PERMANENT EROSION AND SEDIMENT CONTROL MEASURES SHALL BE INSTALLED AT THE EARLIEST PRACTICAL TIME CONSISTENT WITH GOOD CONSTRUCTION PRACTICES. ONE OF THE FIRST CONSTRUCTION ACTIVITIES SHOULD BE THE PLACEMENT OF PERMANENT AND TEMPORARY EROSION AND SEDIMENT CONTROL MEASURES AROUND THE PERIMETER OF THE PROJECT OR THE INITIAL WORK AREA TO PROTECT THE PROJECT, ADJACENT PROPERTIES AND WATER RESOURCES.

TEMPORARY EROSION AND SEDIMENT CONTROL MEASURES SHALL BE COORDINATED WITH PERMANENT MEASURES TO ASSURE ECONOMICAL, EFFECTIVE AND CONTINUOUS CONTROL THROUGHOUT THE CONSTRUCTION PHASE. TEMPORARY MEASURES SHALL NOT BE CONSTRUCTED FOR EXPEDIENCY IN LIEU OF PERMANENT MEASURES.

EROSION AND SEDIMENT CONTROL MEASURES SHALL BE ADEQUATELY MAINTAINED TO PERFORM THEIR INTENDED FUNCTION DURING CONSTRUCTION OF THE PROJECT.

NECESSARY REPAIRS TO BARRIERS OR REPLACEMENT OF BARRIERS SHALL BE ACCOMPLISHED PROMPTLY.

SEDIMENT DEPOSITS SHOULD BE REMOVED AFTER EACH RAINFALL. THEY MUST BE REMOVED WHEN THE LEVEL OF DEPOSITION REACHES APPROXIMATELY ONE-HALF THE HEIGHT OF THE BARRIER.

MATERIAL FROM SEDIMENT TRAPS SHALL NOT BE STOCKPILED OR DISPOSED OF IN A MANNER WHICH MAKES THEM READILY SUSCEPTIBLE TO BEING WASHED INTO ANY WATERCOURSE BY RUNOFF OR HIGH WATER.

ANY SEDIMENT DEPOSITS REMAINING IN PLACE AFTER THE BARRIERS ARE NO LONGER REQUIRED SHALL BE DRESSED TO CONFORM TO THE EXISTING GRADE, PREPARED AND SEEDED.

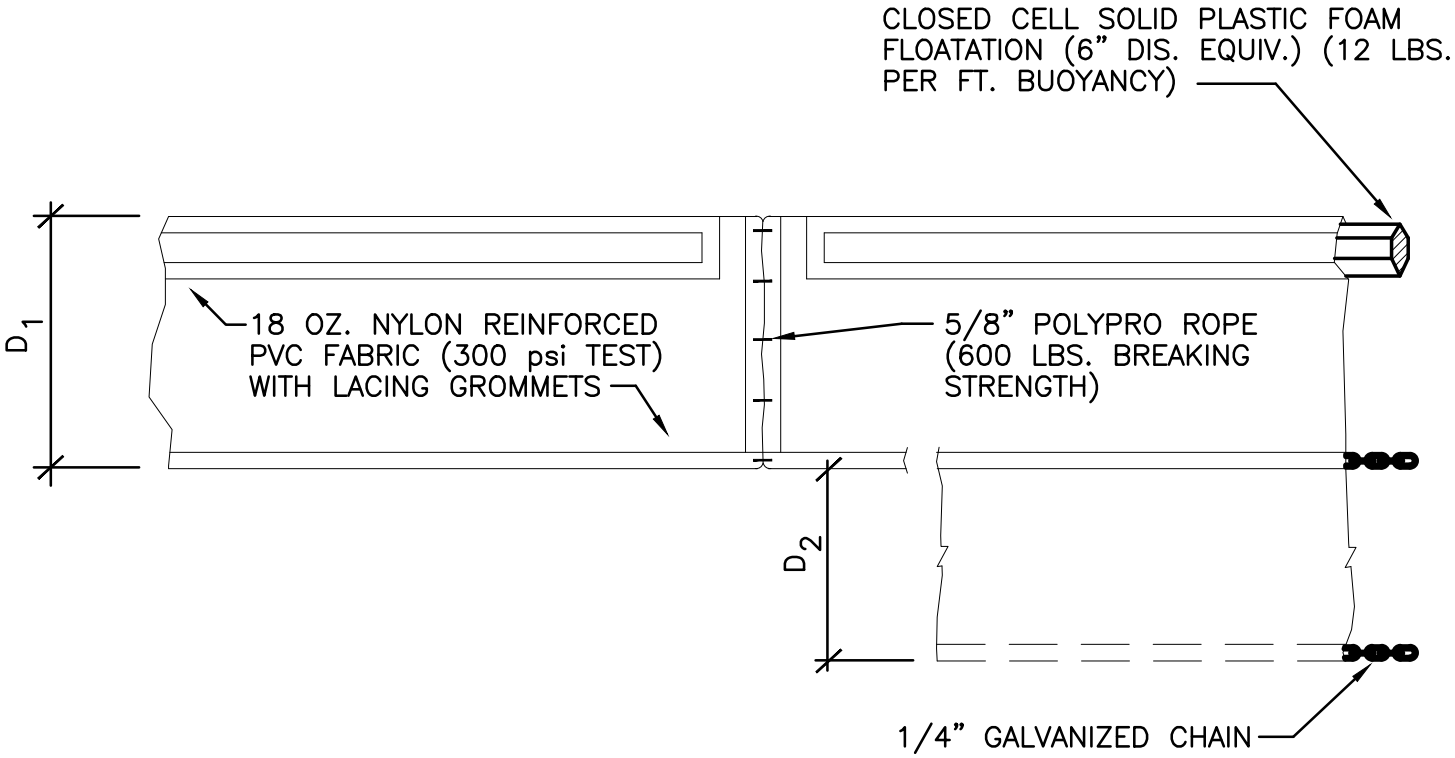

NOTES:

D_1 = 5' STD. (SINGLE PANEL FOR DEPTHS 5' OR LESS).

D_2 = 5' STD. (ADDITIONAL PANEL FOR DEPTHS > 5')

CURTAIN TO REACH BOTTOM UP TO DEPTHS OF 10 FEET. TWO (2) PANELS TO BE USED FOR DEPTHS GREATER THAN 10 FEET UNLESS SPECIAL DEPTH CURTAINS SPECIFICALLY CALLED FOR IN THE PLANS OR AS DETERMINED BY THE ENGINEER.

TYPE I FLOATING TURBIDITY BARRIER

N.T.S.

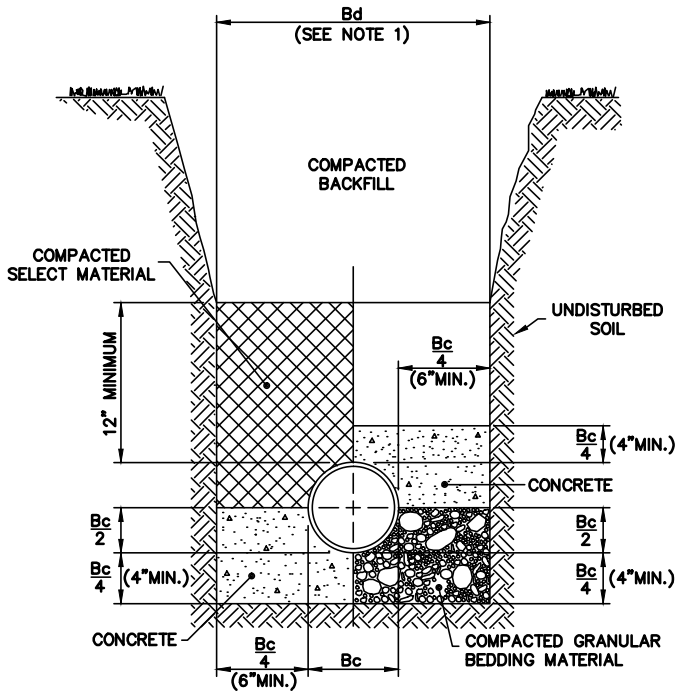

CLASS "A" BEDDING
SPECIAL CONDITIONS

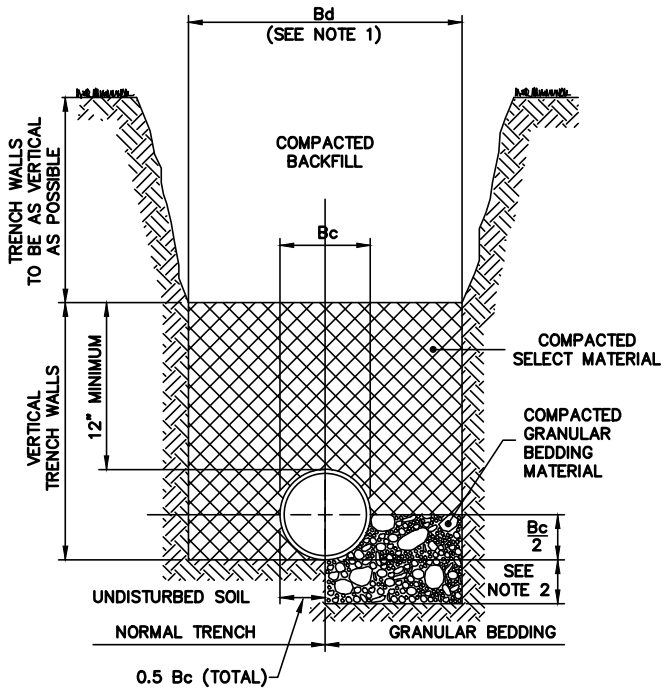

CLASS "B" BEDDING
NORMAL CONDITIONS

NOTES: FOR BEDDING AND TRENCHING

1. Dimension Bc = Pipe O.D.
   Dimension Bd = Trench Width at Top of Pipe
   Maximum Bd = Bc + 30"
   Minimum Bd = Maximum Dimension of Bell + 8" (Unsheeted Trench)

2. Depth for removal for unsuitable material shall be as required to reach suitable foundation. For rock or other non-cushioning material, depth shall be 6" below bottom of utility.

3. All backfill and select material under all roadways, drives (including dirt drives), and parking areas shall be compacted to 98% of the modified proctor maximum dry density. (AASHTO T-180). Backfill and select material under all other areas shall be compacted as follows: From bottom of trench to 12" above top of pipe - 95% of modified proctor maximum dry density (AASHTO T-180). From 12" above top of pipe to top of backfill - 90% of modified proctor maximum dry density (AASHTO T-180)

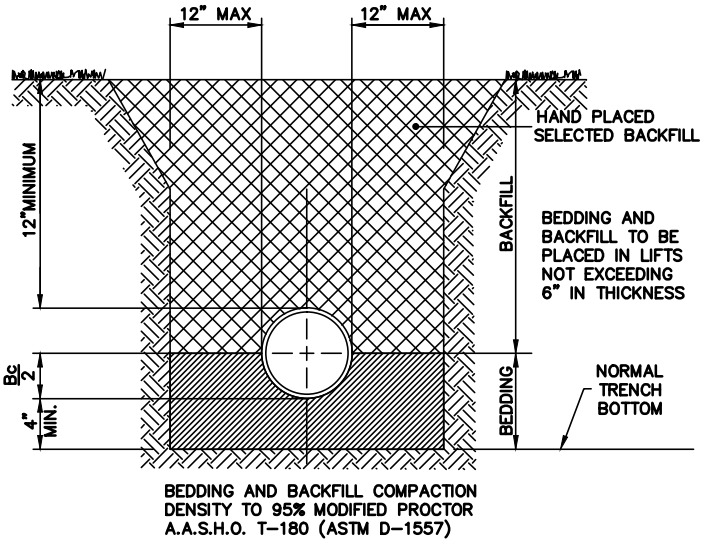

SANITARY SEWER
PIPE BEDDING

BEDDING DETAILS

NOT TO SCALE

TAVARES
America's Seaplane City™

City of Tavares Standard Details

City of Tavares Utility Department
2770 Woodlea Road Tavares, FL 32778
Phone (352)742-6485 Fax (352)742-6110

DATE: DEC. 2009

DETAIL G-3

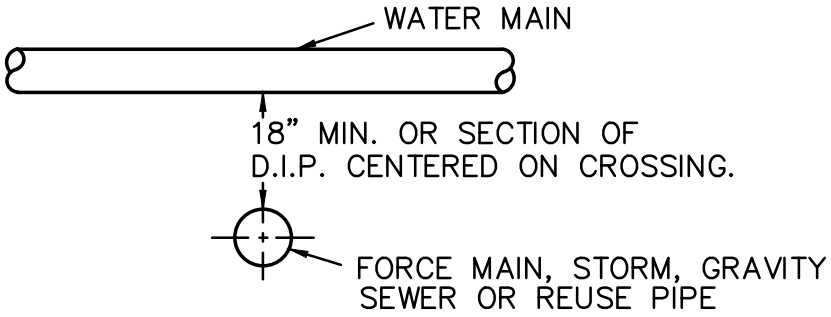

CROSSING SECTION

NOTES:

1. IF WATERMAIN IS LESS THAN 18" ABOVE SANITARY OR STORM SEWER, REUSE OR SEWERAGE FORCEMAIN PIPE AT A CROSSING, THEN CENTER ONE FULL LENGTH JOINT OF D.I.P. ON CROSSING POINT.

2. ALL PIPING CLEARANCES SHALL BE IN ACCORDANCE WITH CHAPTER 62-555.314, F.A.C.

3. DO NOT ENCASE PIPING IN CONCRETE UNLESS SPECIFICALLY AUTHORIZED.

4. ALL PIPING SHALL CLEAR OTHER CONSTRUCTION BY 6" MINIMUM.

PIPING CLEARANCES

NOT TO SCALE

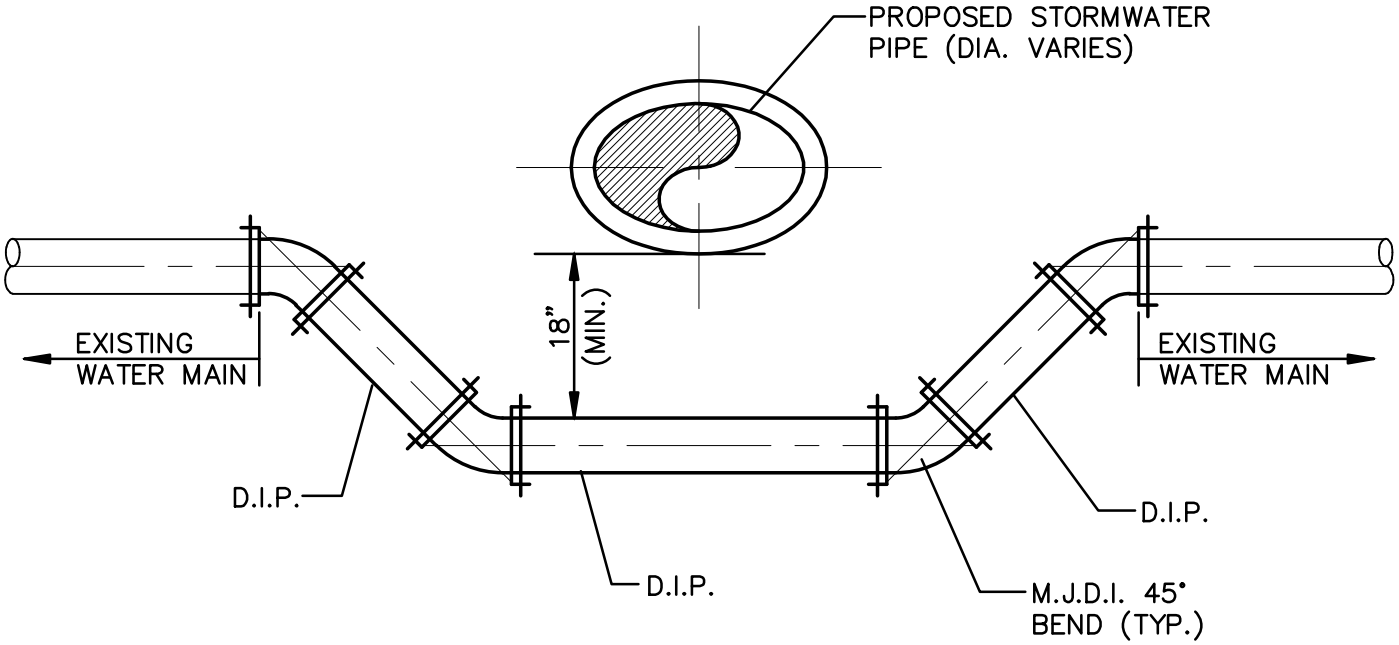

NOTES:

1. ALL PROPOSED JOINTS SHALL BE RESTRAINED.
2. ALL EXISTING JOINTS WITHIN 12' SHALL BE RESTRAINED.
3. ALL PIPING CLEARANCES SHALL BE IN ACCORDANCE WITH CHAPTER 62-555.314 F.A.C.

WATER LINE CROSSING

NOT TO SCALE

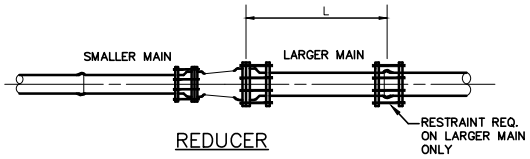

REDUCER

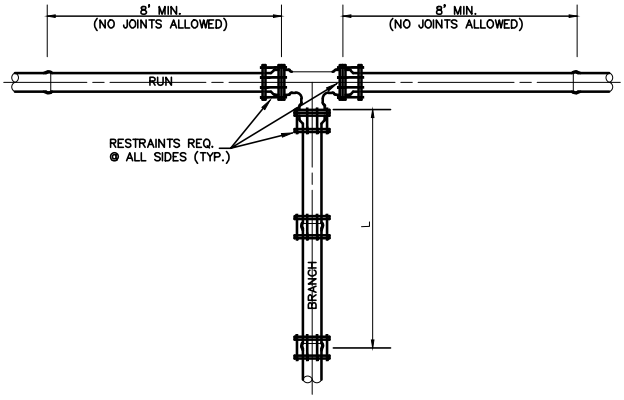

TEE

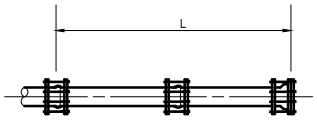

DEAD END/PLUG

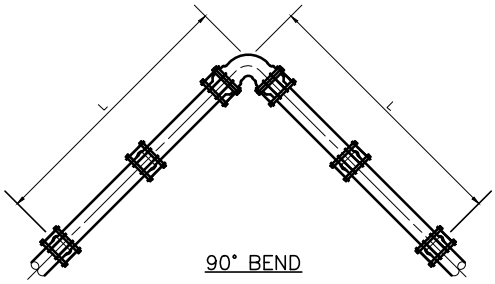

90° BEND

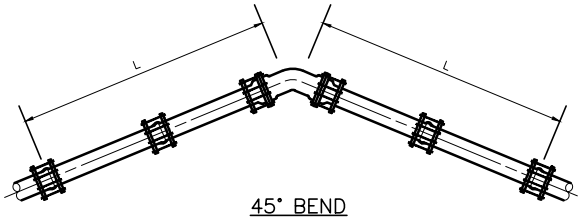

45° BEND

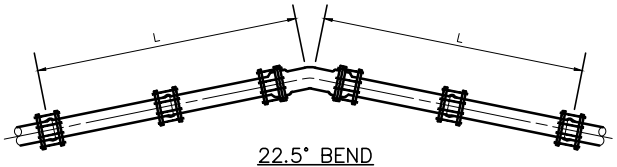

22.5° BEND

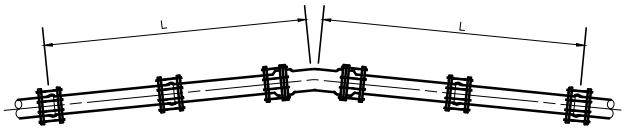

11.25° BEND

TABLE OF THRUST RESTRAINT LENGTHS

PIPE SIZE (inches)	90° BEND		45° BEND		22 1/2° BEND		11 1/4° BEND		TEES		DEAD END & PLUG		REDUCER		
	P.V.C. (L)	DUCTILE IRON (L)	P.V.C. (L)	DUCTILE IRON (L)	P.V.C. (L)	DUCTILE IRON (L)	P.V.C. (L)	DUCTILE IRON (L)	P.V.C. (L)	DUCTILE IRON (L)	P.V.C. (L)	DUCTILE IRON (L)	PIPE SIZES	P.V.C. (L)	DUCTILE IRON (L)
4	20'	16'	8'	7'	4'	3'	2'	2'	15'	10'	45'	29'	6"x4"	33'	21'
6	28'	22'	12'	9'	6'	4'	3'	2'	33'	21'	63'	40'	8"x6"	34'	22'
8	36'	29'	15'	12'	7'	6'	4'	3'	52'	33'	82'	52'	10"x8"	33'	21'
10	43'	34'	18'	14'	9'	7'	4'	3'	68'	43'	98'	63'	12"x10"	34'	22'
12	50'	40'	21'	17'	10'	8'	5'	4'	84'	54'	116'	74'	16"x12"	63'	40'
16	63'	51'	26'	21'	13'	10'	6'	5'	116'	74'	148'	94'	18"x16"	33'	21'
18	70,	56'	29'	23'	14'	11'	7'	6'	131'	83'	163'	103'	20"x18"	33'	21'
20	75'	61'	31'	25'	15'	12'	7'	6'	145'	92'	178'	113'	20"x20"	62'	39'
24	86'	70'	36'	29'	17'	14'	9'	7'	173'	110'	207'	132'			

THRUST RESTRAINT DESIGN NOTES

1. RESTRAINT JOINTS, FITTINGS, & VALVE REQUIREMENTS CALCULATED BY THE THRUST RESTRAINT DESIGN PROGRAM PROVIDED BY UNI-FLANGE, THE FORD METER BOX COMPANY, INC.
2. DATA BASED ON MAX. PRESSURE OF 150 p.s.i., THE UNIFIED SOILS CLASSIFICATION SYSTEM (SOIL TYPE SP), THE PIPE BEDDED IN NATIVE SOIL w/ A MINIMUM OF 2.5' COMPACTED FILL OVER THE PIPE, AND USING A SAFETY FACTOR OF 1.5 FOR THE DATA.
3. ALL FITTINGS & VALVES SHALL HAVE RESTRAINED JOINTS PER SPECIFICATIONS & ALL BELL & SPIGOT JOINTS TO BE RESTRAINED WITH A RESTRAINING HARNESS WITHIN THE REQUIRED LENGTH OF RESTRAINED PIPE (L).
4. THRUST BLOCKS SHALL BE USED ONLY AS SPECIFIED BY PROJECT ENGINEER.

THRUST RESTRAINT DETAILS

NOT TO SCALE

TAVARES
America's Seaplane City™

City of Tavares Standard Details

City of Tavares Utility Department
2770 Woodlea Road Tavares, FL 32778
Phone (352)742-6485 Fax (352)742-6110

DATE: DEC. 2009

DETAIL G-6

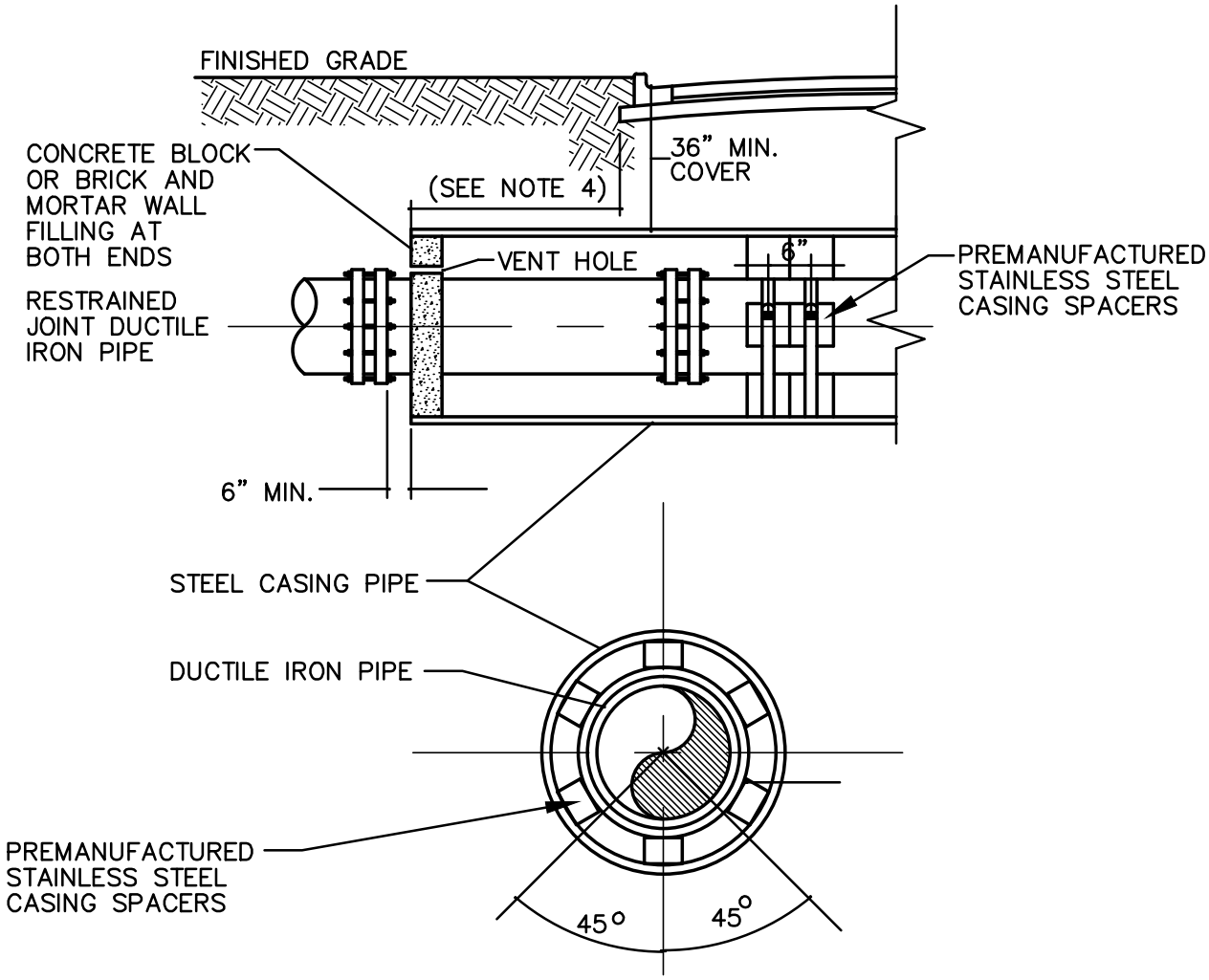

1. WHEN CONSTRUCTION IS WITHIN FDOT JURISDICTION, ADDITIONAL REQUIREMENTS OF THE UTILITY ACCOMMODATION GUIDE SHALL BE MET.
2. STAINLESS STEEL CASING SPACERS SHALL BE REQUIRED ON ALL BORE AND JACK INSTALLATIONS.
3. LARGER SKIDS SHALL BE REQUIRED FOR PIPE GREATER THAN 24" DIAMETER.
4. WHERE PRACTICAL, CASING SHALL EXTEND 10' BEYOND EDGE OF PAVEMENT AND SHALL NOT BE LESS THAN 6' BEYOND EDGE OF PAVEMENT IN ANY CASE. THE CITY MAY REQUIRE LONGER CASING FOR DEEPER BORES.

BORING AND JACKING DETAIL

SCALE: 1/2" = 1'-0"

TAVARES
America's Seaplane City™

City of Tavares Standard Details

City of Tavares Utility Department
2770 Woodlea Road Tavares, FL 32778
Phone (352)742-6485 Fax (352)742-6110

DATE: DEC. 2009

DETAIL G-7

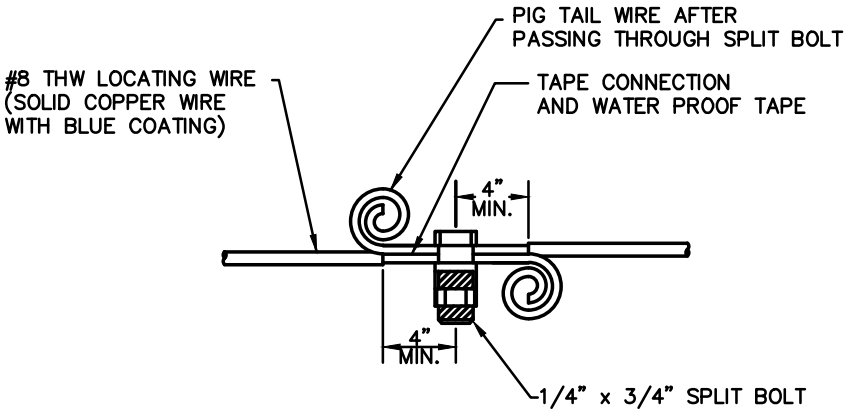

NOTES:

1. THE ENDS OF ALL LOCATING WIRES, WHETHER THEY ARE SPLICED, CONNECTED, OR TERMINATED, SHALL HAVE THE LAST THREE INCHES PIG TAILED AS DETAILED HEREON.

2. AFTER INSTALLATION OF THE LOCATING WIRE THE SYSTEM SHALL BE SUBJECTED TO TESTING, IN THE PRESENCE OF CITY UTILITIES STAFF PRIOR TO BACKFILL, IN ORDER TO THAT THE SYSTEM IS FUNCTIONAL.

LOCATING WIRE SPLICING

NOT TO SCALE

TAVARES
America's Seaplane City™

City of Tavares Standard Details

City of Tavares Utility Department
2770 Woodlea Road Tavares, FL 32778
Phone (352)742-6485 Fax (352)742-6110

DATE: DEC. 2009

DETAIL G-8

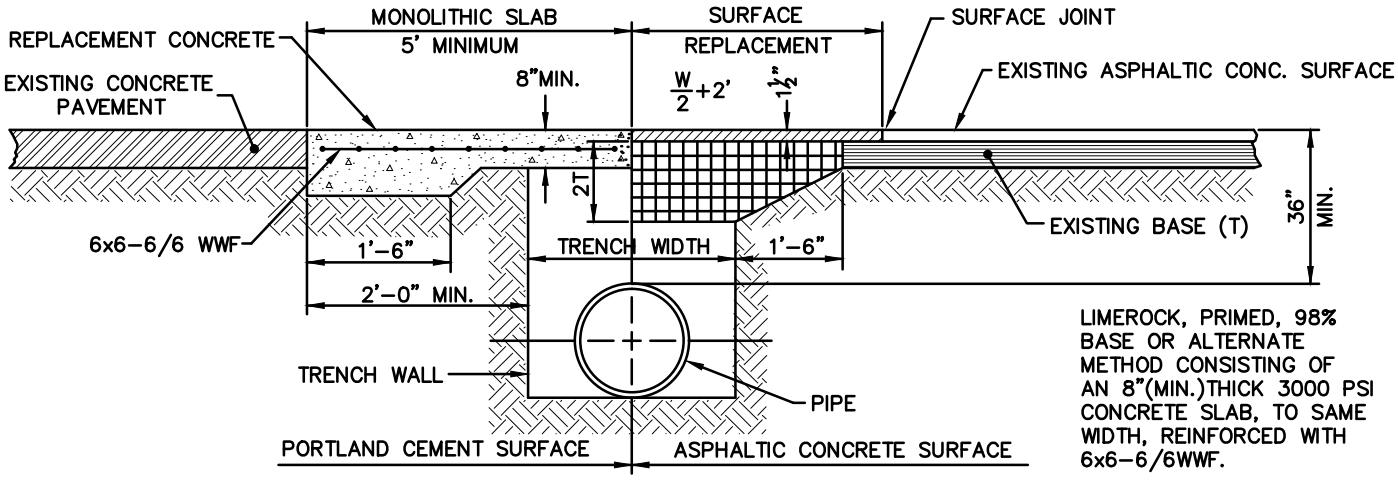

OPEN CUT AND REPAIR DETAIL

NOT TO SCALE

TAVARES
America's Seaplane City™

City of Tavares Standard Details

City of Tavares Utility Department
2770 Woodlea Road Tavares, FL 32778
Phone (352)742-6485 Fax (352)742-6110

DATE: DEC. 2009

DETAIL G-9

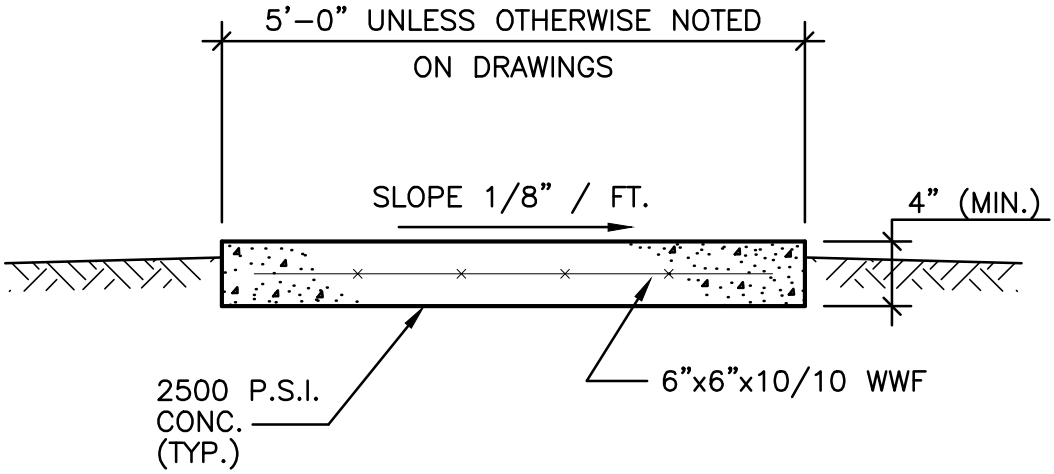

SECTION

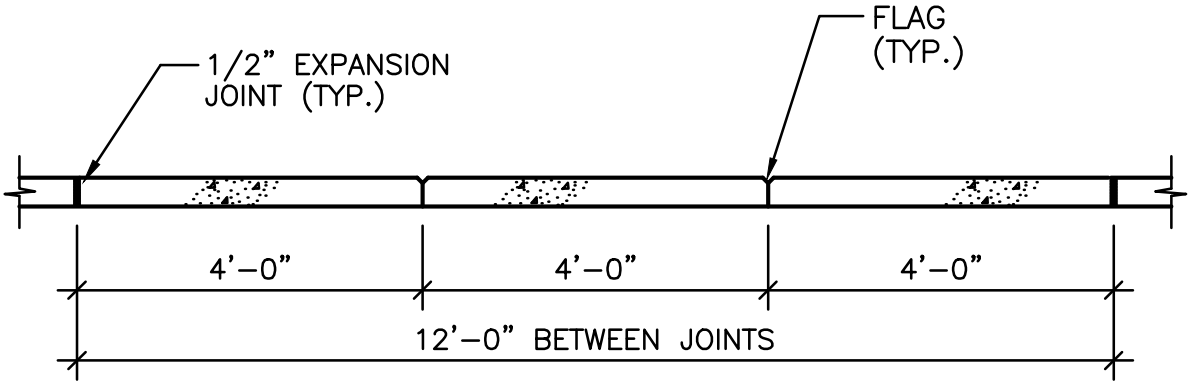

PROFILE

CONCRETE WALKWAY DETAIL

NOT TO SCALE

TAVARES
America's Seaplane City™

City of Tavares Standard Details

City of Tavares Utility Department
2770 Woodlea Road Tavares, FL 32778
Phone (352)742-6485 Fax (352)742-6110

DATE: DEC. 2009

DETAIL G-10

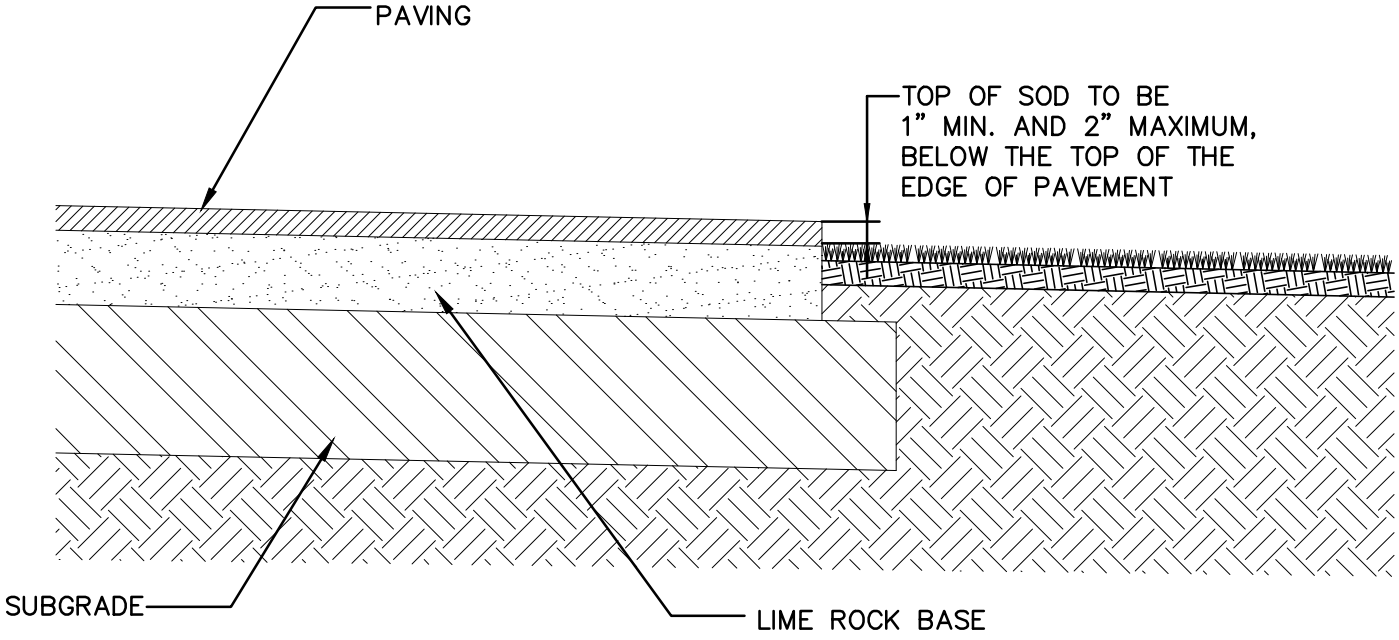

SOD PLANTING

NOT TO SCALE

City of Tavares Standard Details

City of Tavares Utility Department
2770 Woodlea Road Tavares, FL 32778
Phone (352)742-6485 Fax (352)742-6110

DATE: DEC. 2009

DETAIL G-11

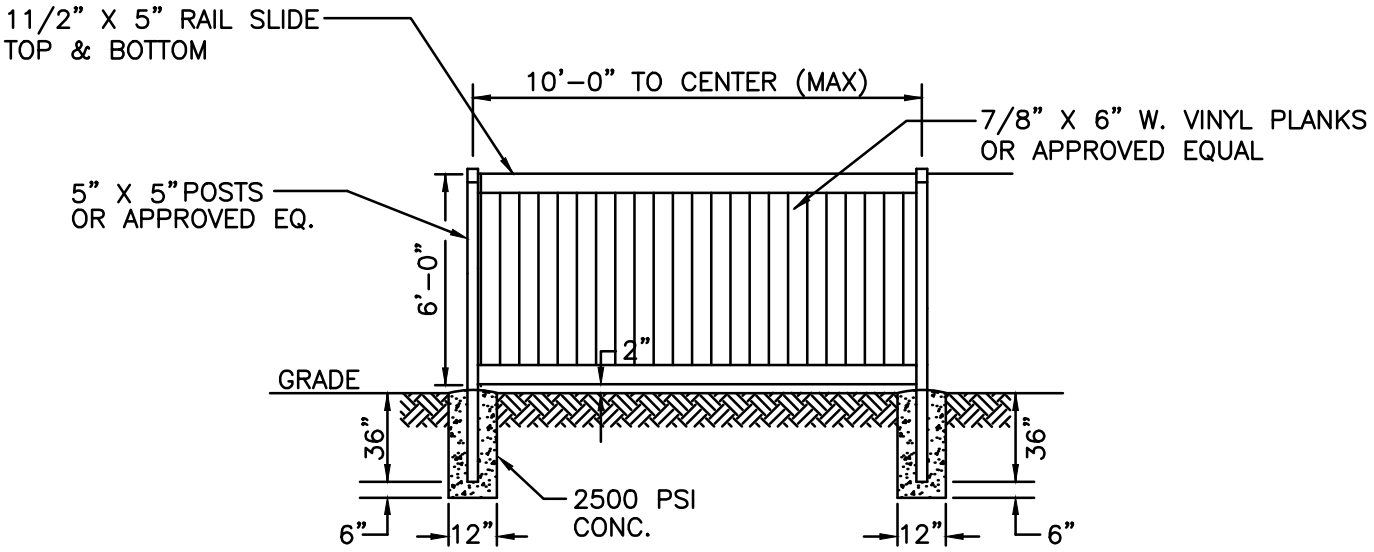

VINYL FENCE DETAIL

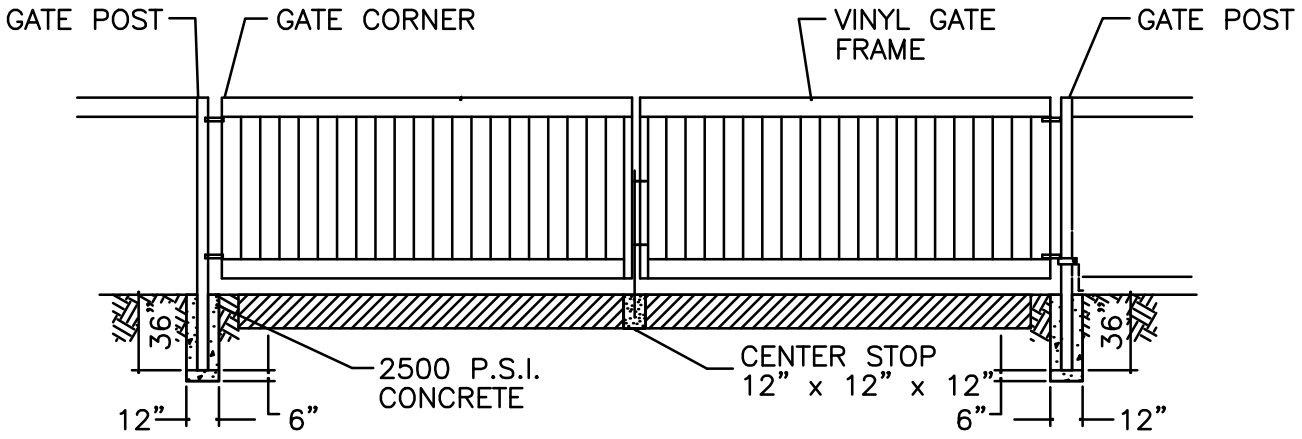

DOUBLE SWING GATE DETAIL

NOTES:

1. VINYL FENCING AND GATES ARE TO BE APPROVED BY THE UTILITY THE FIRST SPAN ON EACH SIDE OF A CORNER POST ONLY.

TAVARES America's Seaplane City™	**City of Tavares Standard Details** City of Tavares Utility Department 2770 Woodlea Road Tavares, FL 32778 Phone (352)742-6485 Fax (352)742-6110	DATE: DEC. 2009 DETAIL G-12

REUSE DETAILS

GENERAL REUSE AND EFFLUENT REUSE NOTES

1. ALL REUSE AND EFFLUENT REUSE PIPING TO BE OWNED AND MAINTAINED BY THE CITY OF TAVARES SHALL BE A SOLID PURPLE COLOR.

2. REUSE AND EFFLUENT REUSE MAINS SHALL BE PVC CONFORMING TO AWWA C-900, DR 18 FOR PIPE SIZES 4"-12". PIPES 14" & LARGER SHALL BE AWWA C-905, DR 25. PRESSURE CLASS 350 DIP IS AN ACCEPTABLE ALTERNATE. ALL COUPLINGS, CLEANING COMPOUNDS, SOLVENTS, LUBRICANTS, AND PIPE PREPARATION, FOR LAYING, SHALL BE IN ACCORDANCE WITH THE PIPE MANUFACTURERS LATEST RECOMMENDATIONS.

3. DEPTH OF REUSE AND EFFLUENT REUSE LINES TO BE 36" MIN. BELOW FINISHED GRADE.

4. REUSE AND EFFLUENT REUSE MAINS TO BE LOCATED 5' FROM BACK OF CURB OR EDGE OF PAVEMENT UNLESS OTHERWISE NOTED.

5. ALL PIPING CLEARANCES SHALL BE IN ACCORDANCE WITH CHAPTER 62-555.314, F.A.C.

6. ALL REUSE AND EFFLUENT REUSE MAINS UNDER PAVEMENT SHALL BE DUCTILE IRON PIPE AND SHALL EXTEND 5' BEYOND THE EDGE OF PAVEMENT OR BACK OF CURB, EXCEPT DIRECTIONAL BORES, WHICH SHALL BE SDR-11 HDPE.

7. ALL IRRIGATION SLEEVING UNDER PAVEMENT SHALL EXTEND 5' BEYOND THE EDGE OF PAVEMENT OR BACK OF CURB.

8. ALL OTHER REQUIREMENTS OF THE CITY WATER SYSTEM SHALL APPLY TO THE RE-USE SYSTEM.

9. PROPER SIGNAGE FOR PUBLIC ACCESS IRRIGATION AREAS TO BE SUPPLIED BY THE DEVELOPER / CONTRACTOR, IN ACCORDANCE WITH CHAPTER 62-610.418, F.A.C.

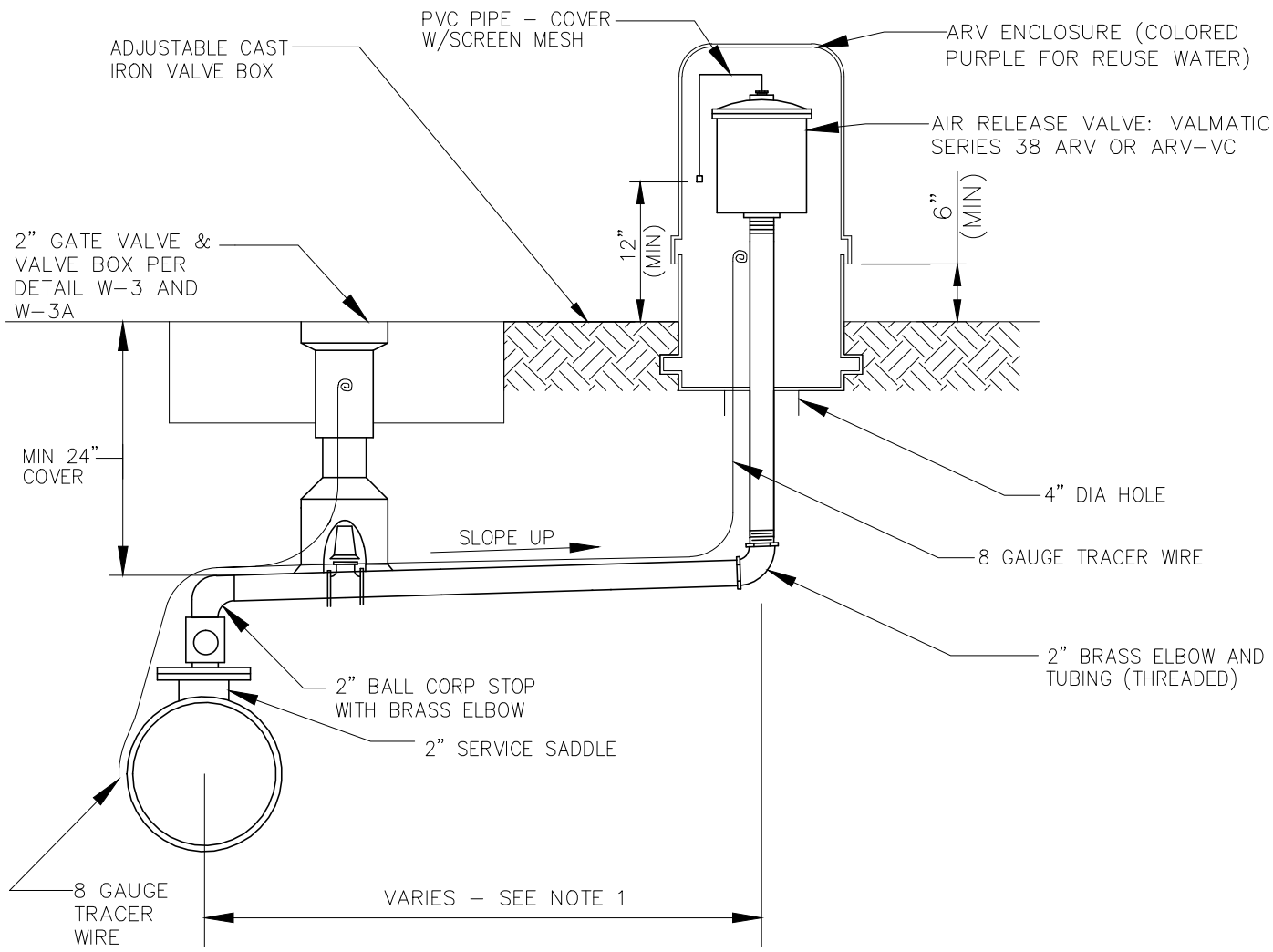

NOTES:

1. OFFSET DISTANCE SHOWN ON DRAWINGS.
2. ADJUST HORIZONTAL LOCATION OF ARV ENCLOSURE, AS REQUIRED TO AVOID SIDEWALK. LOCATE ARV ENCLOSURE WITHIN 1' OF R/W OR AS OTHERWISE DETERMINED BY THE CITY.

OFFSET AIR RELEASE VALVE VAULT DETAIL

NOT TO SCALE

TAVARES America's Seaplane City™	**City of Tavares Standard Details** City of Tavares Utility Department 1000 Captain Haynes Road Tavares, FL 32778 Phone (352)742-6485 Fax (352)742-6110	DATE: MAR 2016 DETAIL R-2

NOTE: BRASS SERVICE MATERIALS
1. FORD
2. MULLUER
3. MCDONALD

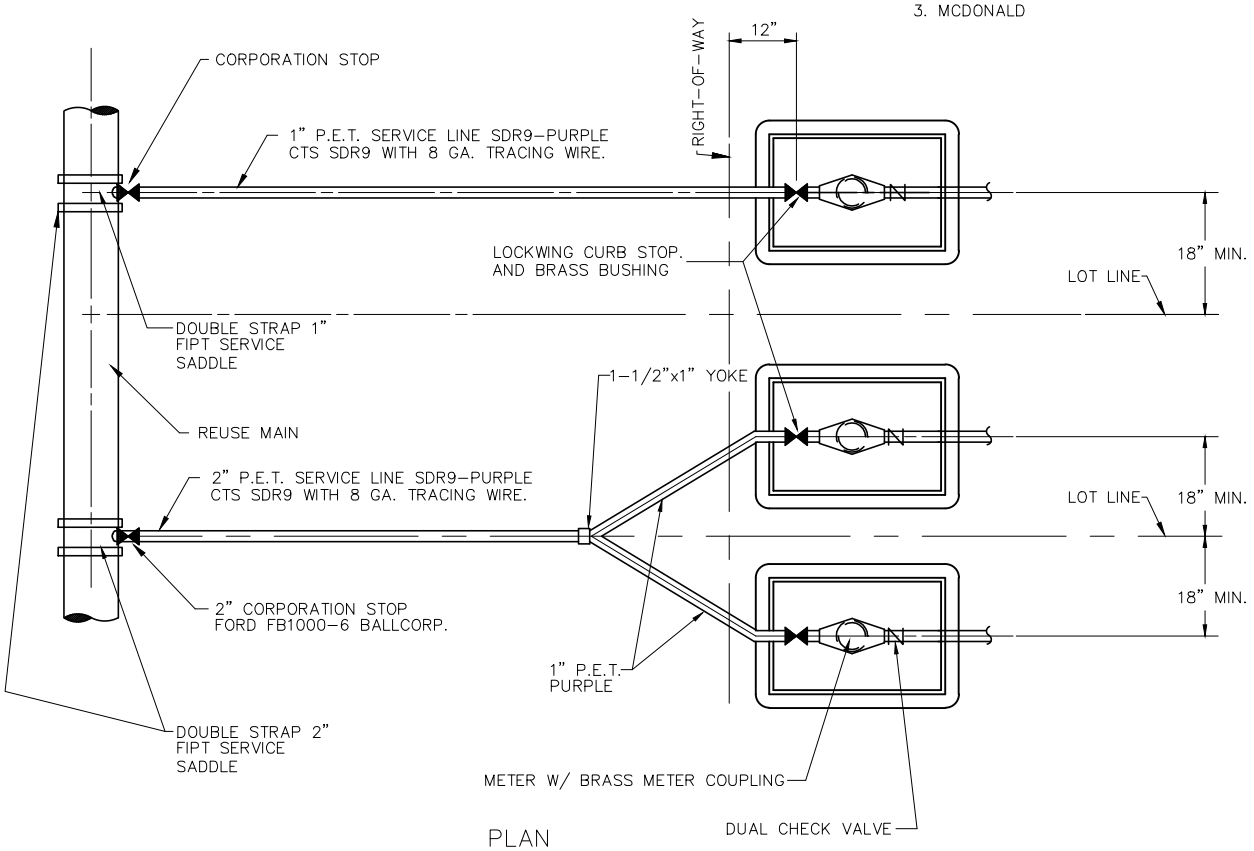

PLAN

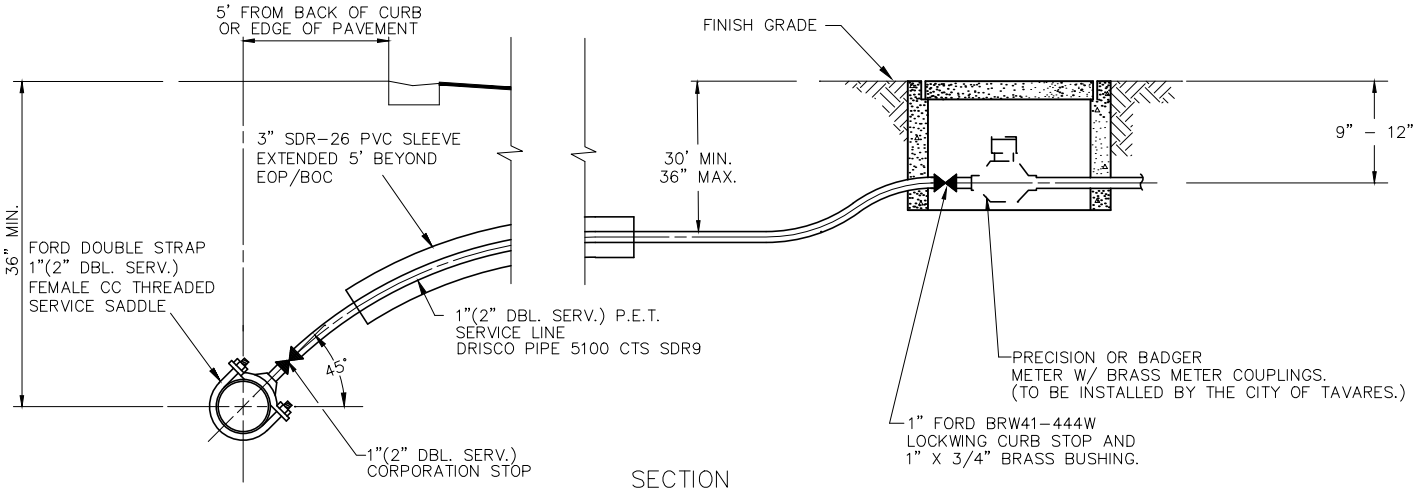

SECTION

REUSE WATER SERVICE CONNECTION DETAILS

NOT TO SCALE

(NOTE: METERS TO BE INSTALLED BY CITY OF TAVARES.)

TAVARES
America's Seaplane City™

City of Tavares Standard Details

City of Tavares Utility Department
2770 Woodlea Road Tavares, FL 32778
Phone (352)742-6485 Fax (352)742-6110

DATE: DEC. 2009

DETAIL R-3

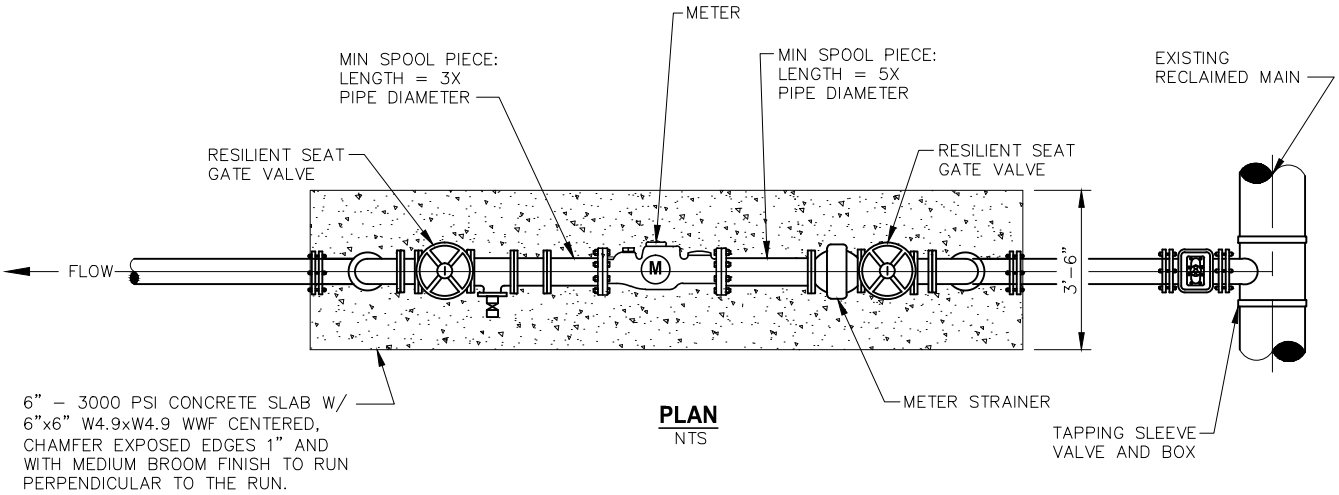

PLAN
NTS

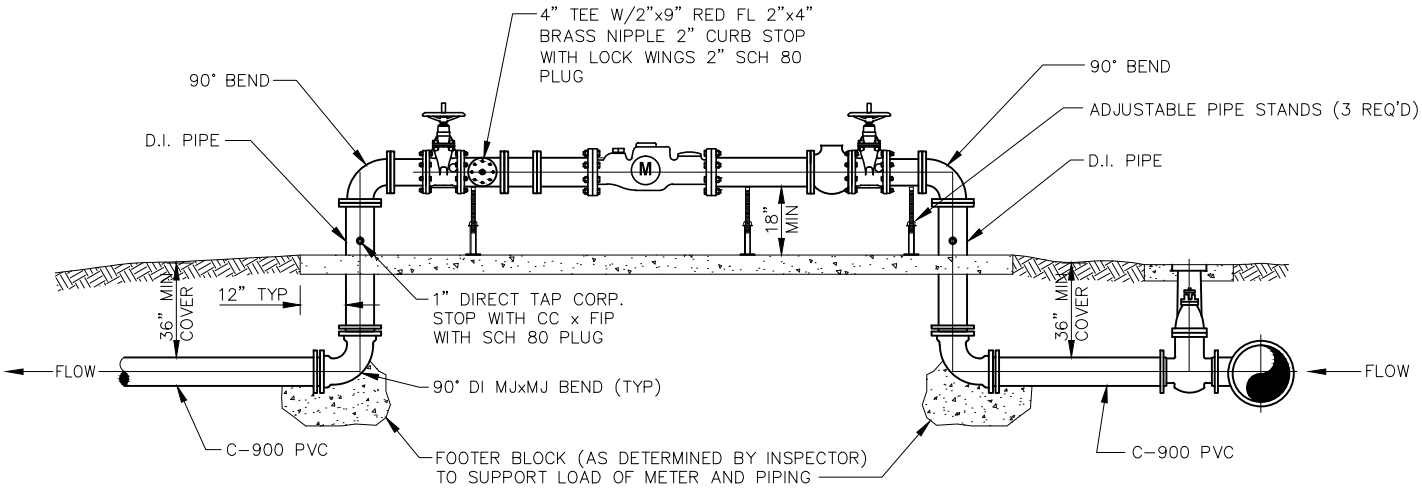

ELEVATION
NTS

NOTES:
1. ALL ABOVE GROUND PIPE TO BE PAINTED WITH 2 COATS OF APPROVED PANTONE PURPLE PAINT.

RECLAIMED WATER METERING DETAIL

NOT TO SCALE

(NOTE: METERS TO BE INSTALLED BY CITY OF TAVARES.)

TAVARES
America's Seaplane City™

City of Tavares Standard Details

City of Tavares Utility Department
2770 Woodlea Road Tavares, FL 32778
Phone (352)742-6485 Fax (352)742-6110

DATE: DEC. 2009

DETAIL R-4

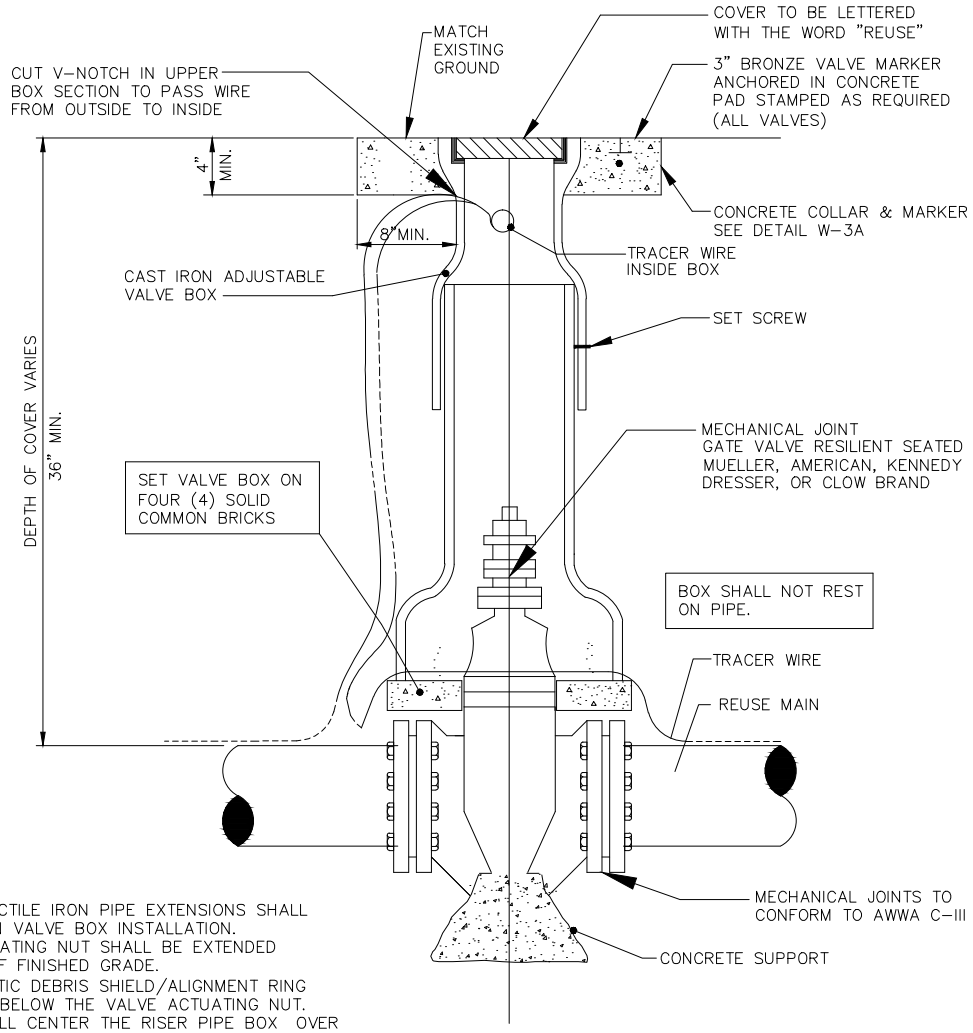

NOTES

1. PVC PIPE OR DUCTILE IRON PIPE EXTENSIONS SHALL NOT BE USED ON VALVE BOX INSTALLATION.
2. THE VALVE ACTUATING NUT SHALL BE EXTENDED WITHIN 2 FEET OF FINISHED GRADE.
3. PROVIDE A PLASTIC DEBRIS SHIELD/ALIGNMENT RING WHICH INSTALLS BELOW THE VALVE ACTUATING NUT. THIS SHIELD SHALL CENTER THE RISER PIPE BOX OVER THE ACTUATING NUT AND MINIMIZE INFILTRATION.
4. FOR NEW CONSTRUCTION, THE VALVE BOX SHALL BE ADJUSTED TO MIDRANGE TO ALLOW FOR FUTURE BOX ADJUSTMENTS.
5. VALVE BOX IS TYLER UNION NO. 6850, OR APPROVED EQUAL, TWO PIECE SCREW TYPE.

GATE VALVE & BOX DETAIL

NOT TO SCALE

TAVARES
America's Seaplane City™

City of Tavares Standard Details

City of Tavares Utility Department
2770 Woodlea Road Tavares, FL 32778
Phone (352)742-6485 Fax (352)742-6110

DATE: OCT. 2016

DETAIL R-5

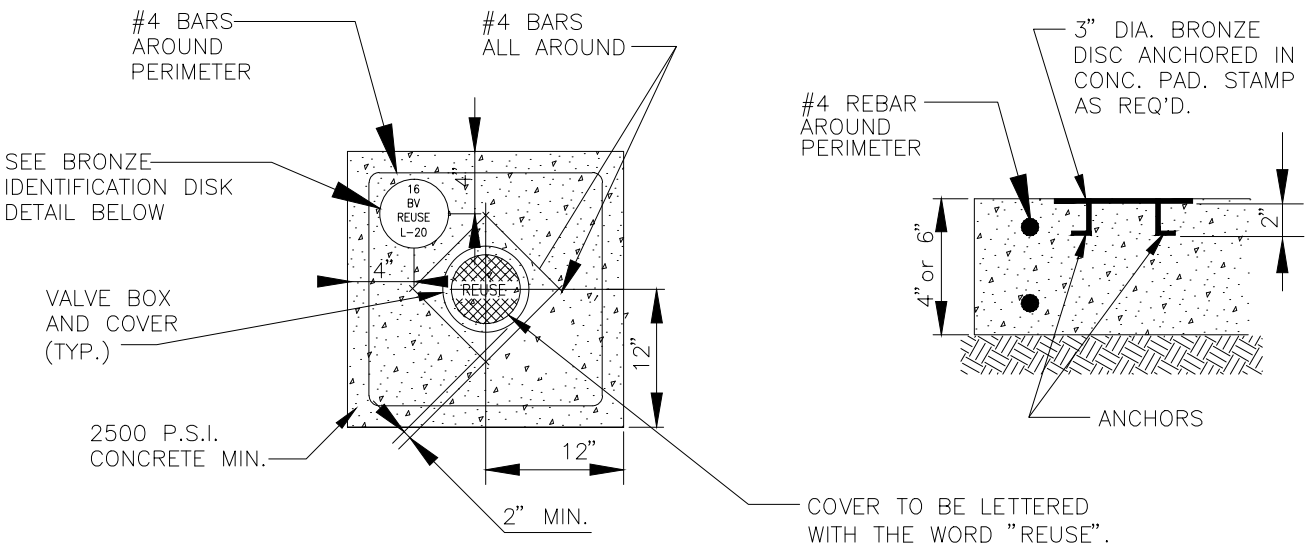

NOTE:

1. BRONZE IDENTIFICATION DISC SHALL BE REQUIRED FOR ALL VALVES.
2. 6" THICK CONCRETE PAD IN ROADWAY OR PAVED AREAS.

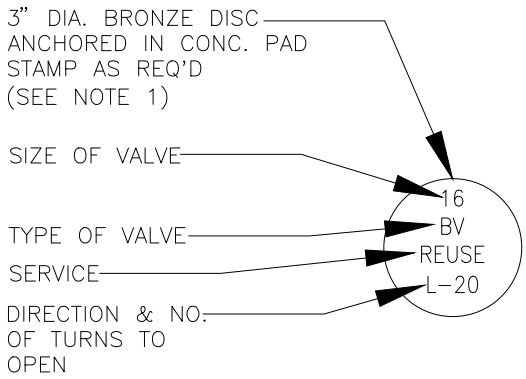

BRONZE IDENTIFICATION DISC DETAIL

VALVE COLLAR DETAIL

NOT TO SCALE

TAVARES
America's Seaplane City™

City of Tavares Standard Details

City of Tavares Utility Department
2770 Woodlea Road Tavares, FL 32778
Phone (352)742-6485 Fax (352)742-6110

DATE: OCT. 2016

DETAIL R-5A

SEWER DETAILS

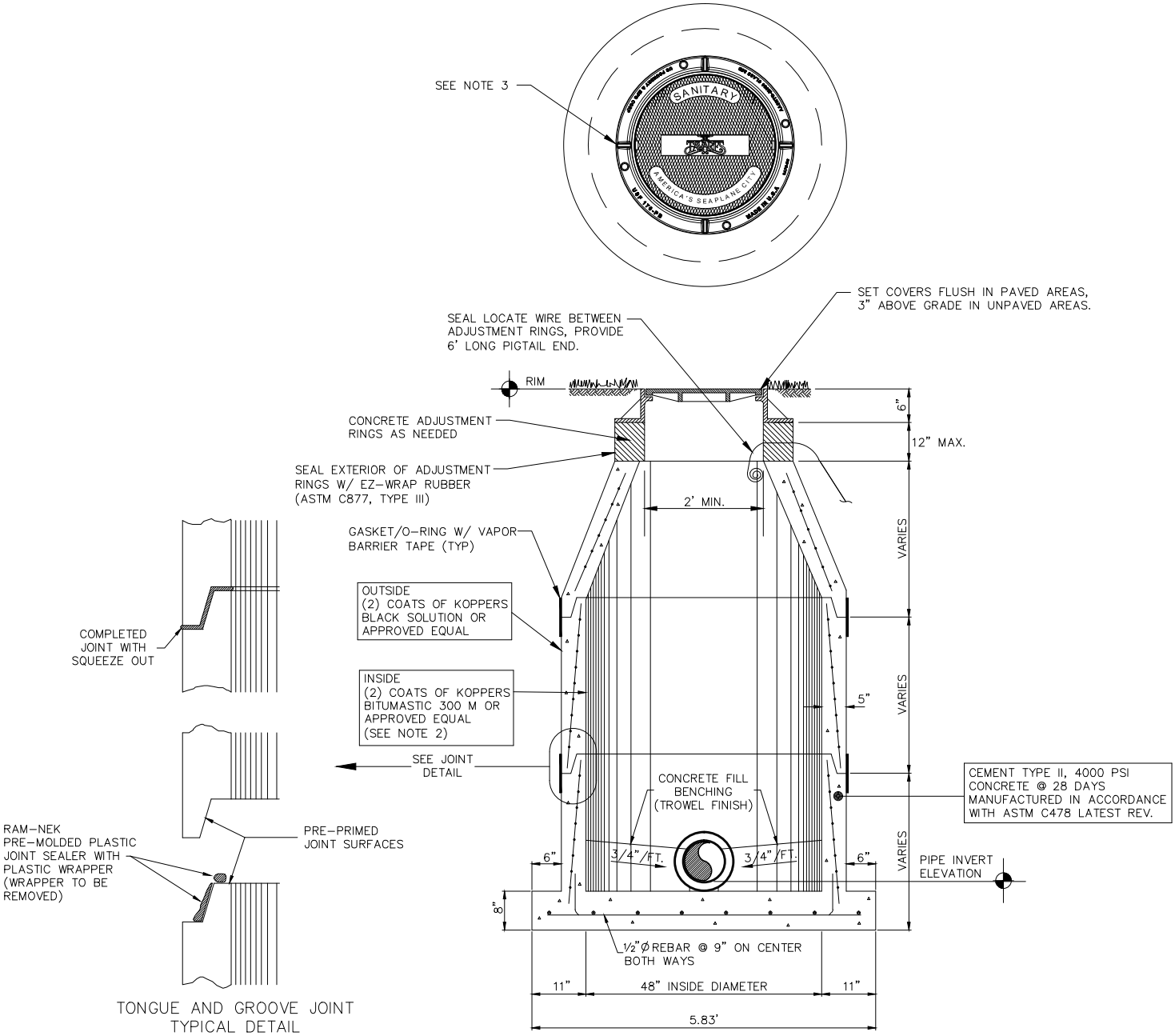

NOTES

1. ALTERNATE-PRECAST MANHOLE TOPS MUST BE APPROVED IN ADVANCE.
2. GREEN MONSTER LINER (150 MILS DFT) SHALL BE USED WHERE SHOWN ON DRAWINGS
3. MANHOLE LID TO BE CENTERED OVER EFFLUENT PIPE
4. INSTALL ONE CONTINUOUS PIECE OF RAM-NEK AROUND ENTIRE MATING SURFACE BETWEEN ADJUSTMENT RINGS AND MANHOLE FRAME.

SANITARY PRECAST MANHOLE DETAIL

NOT TO SCALE

TAVARES
America's Seaplane City™

City of Tavares Standard Details

City of Tavares Utility Department
1000 Captain Haynes Road Tavares, FL 32778
Phone (352)742-6485 Fax (352)742-6110

DATE: MAR 2016

DETAIL S-1

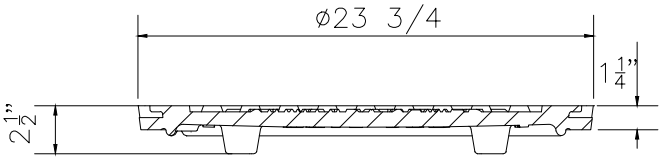

(2)—Non Penetrating
Pick Holes

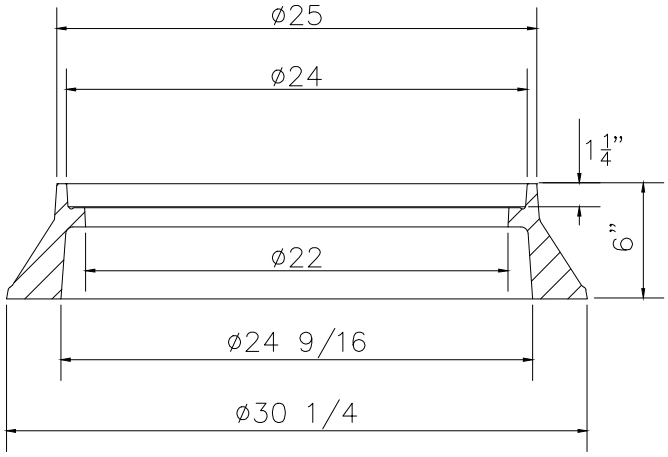

*MODEL USF 170—PB RING AND CE—PB COVER
RING NO. 8021468
COVER NO. 8017774
MATERIAL AASHTO M306 GRAY CAST IRON CLASS 35B

SANITARY MANHOLE COVER DETAIL

NOT TO SCALE

TAVARES America's Seaplane City™	**City of Tavares Standard Details** City of Tavares Utility Department 1000 Captain Haynes Road Tavares, FL 32778 Phone (352)742-6485 Fax (352)742-6110	DATE: MAR 2016 DETAIL S-1a

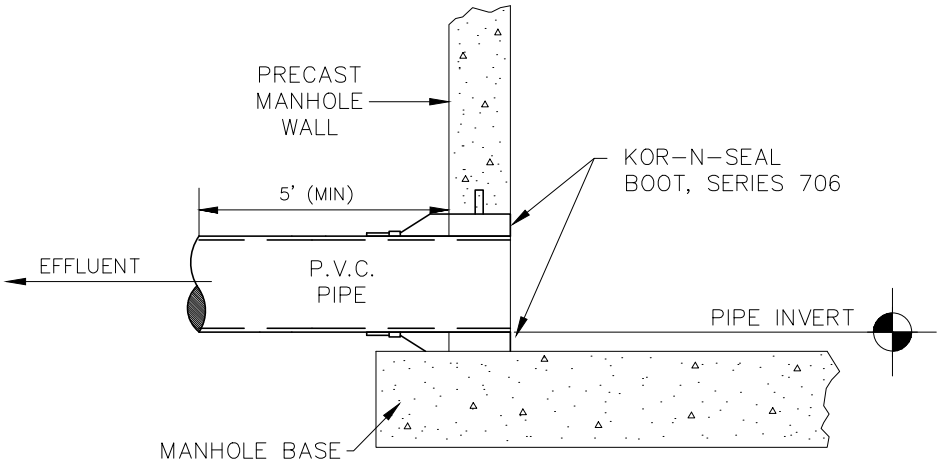

EFFLUENT CONNECTION

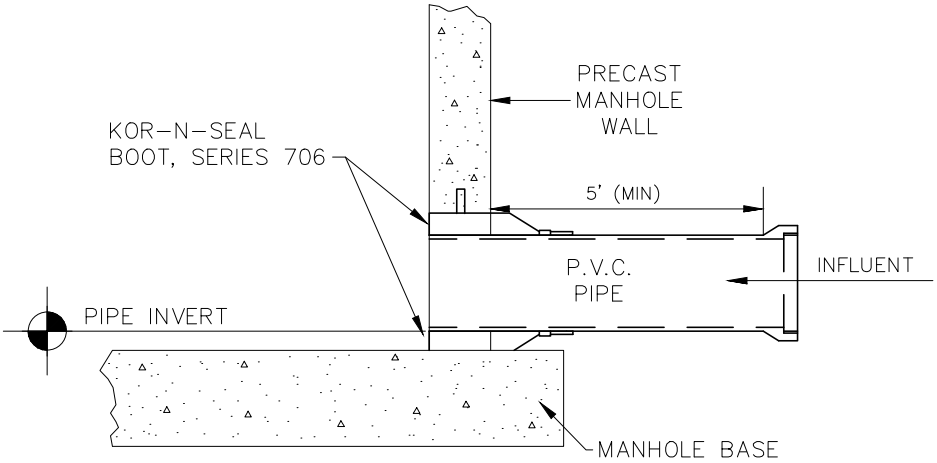

INFLUENT CONNECTION

PIPE CONNECTION TO PRECAST SANITARY MANHOLE

NOT TO SCALE

TAVARES
America's Seaplane City™

City of Tavares Standard Details

City of Tavares Utility Department
1000 Captain Haynes Road Tavares, FL 32778
Phone (352)742-6485 Fax (352)742-6110

DATE: MAR 2016

DETAIL S-2

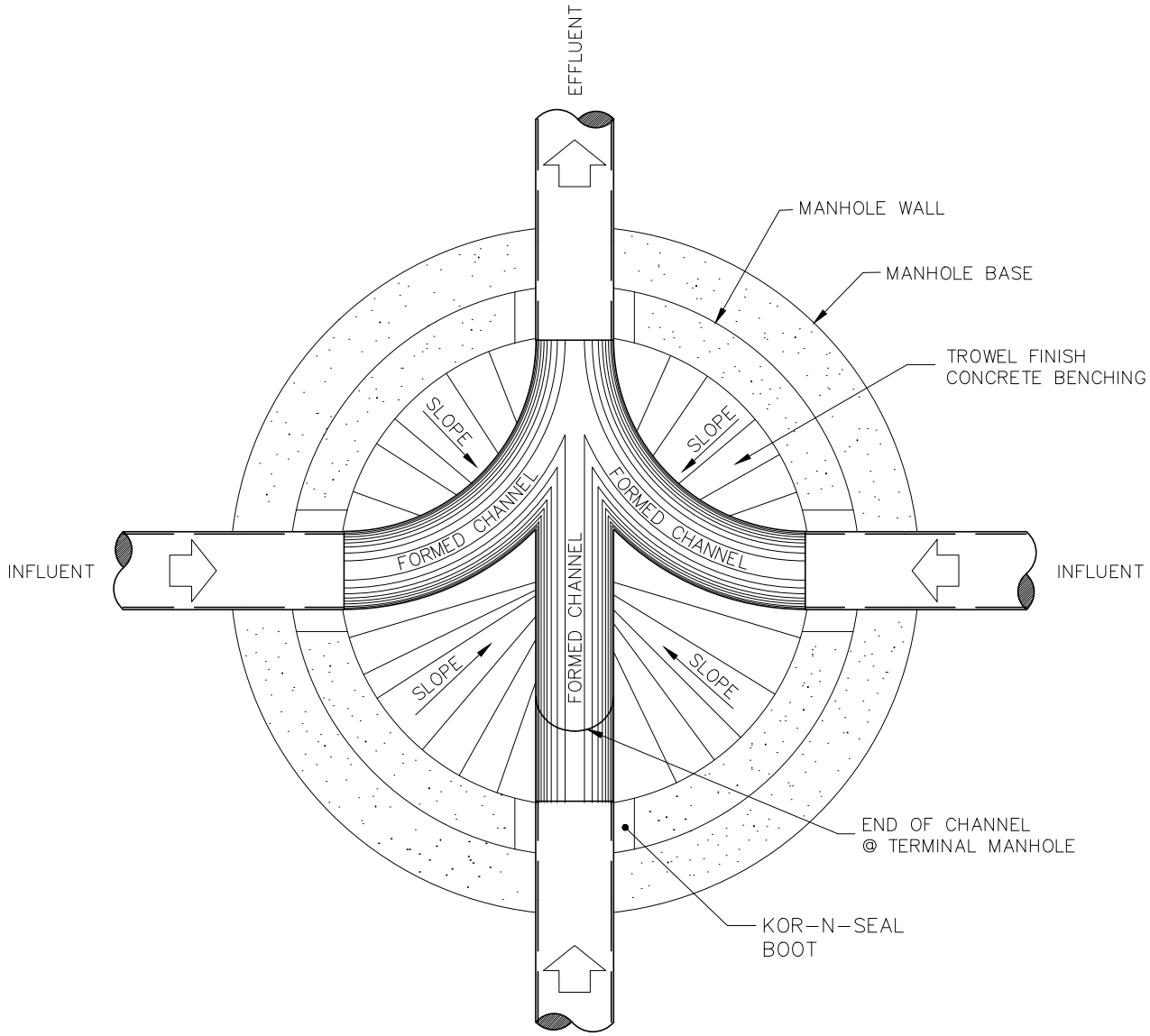

FLOW PATTERNS FOR INVERT CHANNELS

NOTES:
1. INVERT CHANNELS TO BE CONSTRUCTED FOR SMOOTH FLOW WITH NO OBSTRUCTIONS. HALF PIPE INVERT CHANNELS.
2. SPILLWAYS SHALL BE CONSTRUCTED BETWEEN PIPES WITH DIFFERENT INVERT ELEVATIONS PROVIDING FOR SMOOTH FLOWS.
3. CHANNELS FOR FUTURE CONNECTIONS (STUBS) SHALL BE CONSTRUCTED, FILLED WITH SAND AND COVERED WITH 1" OF MORTAR.

TYPICAL MANHOLE PLAN

NOT TO SCALE

TAVARES
America's Seaplane City™

City of Tavares Standard Details

City of Tavares Utility Department
1000 Captain Haynes Road Tavares, FL 32778
Phone (352)742-6485 Fax (352)742-6110

DATE: MAR 2016

DETAIL S-3

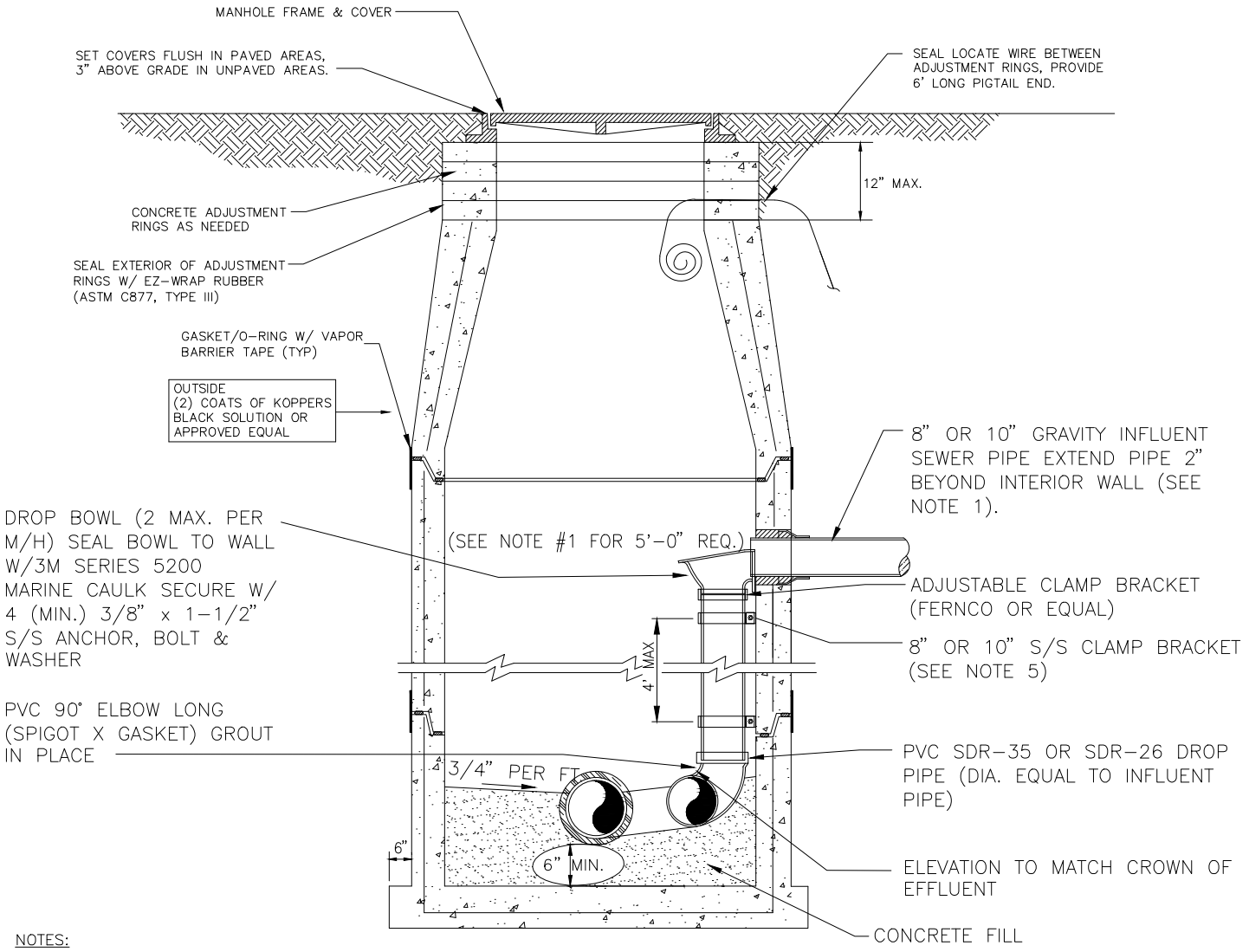

NOTES:

1. THIS ASSEMBLY IS FOR 8" OR 10" GRAVITY INFLUENT LINES ONLY. NO DROPS ALLOWED FOR FORCE MAINS. MAXIMUM OF 2 INSIDE DROP BOWLS PER MANHOLE. A 5'-0" DIA. MANHOLE (6" THICK WALLS) IS REQUIRED. DROP BOWL BY RELINER OR APPROVED EQUAL REQUIRED. THE INSIDE DROP FOR AN 8" HIGH-LINE SHALL BE CONSTRUCTED SIMILAR TO ABOVE.
2. PRECAST MANHOLE SECTIONS TO BE MANUFACTURED IN ACCORDANCE WITH THE LATEST EDITIONS OF A.S.T.M. C-478 WITH 4000 LB. CONC., TYPE II CEMENT. ALL LIFTING HOLES AND OUTSIDE INSERTS SHALL BE FILLED WITH NON-SHRINK GROUT AND COATED WITH BITUMINOUS WATERPROOFING MATERIAL.
3. THE INTERIOR OF MANHOLE AND THE INTERIOR OF ADJUSTMENT RINGS SHALL BE LINED WITH GREEN MONSTER LINER (150 MILS DFT).
4. THE DROP BOWL ASSEMBLY SHALL BE INSTALLED PRIOR TO APPLICATION OF SPECIALTY LINING MATERIAL.
5. ADJUSTABLE CLAMPING BRACKET (MIN. 2 PER DROP BOWL ASSY). 1-1/2" WIDE, 11 GA. W/ 3/8" DIA. 18-8 PINCH BOLTS AND NUTS. SECURE TO M/H WALL WITH (2) 3/8" X 1" BOLT, ANCHOR & WASHER PER BRACKET ASSY. ALL 316 STAINLESS STEEL MATERIALS.
6. INSTALL ONE CONTINUOUS PIECE OF RAM-NEK AROUND ENTIRE MATING SURFACE BETWEEN ADJUSTMENT RINGS AND MANHOLE FRAME.
7. MANHOLE LID SHALL BE CENTERED OVER DROP BOWL.

INSIDE DROP SANITARY PRECAST MANHOLE DETAIL

NOT TO SCALE

TAVARES
America's Seaplane City™

City of Tavares Standard Details

City of Tavares Utility Department
1000 Captain Haynes Road Tavares, FL 32778
Phone (352)742-6485 Fax (352)742-6110

DATE: MAR 2016

DETAIL S-4

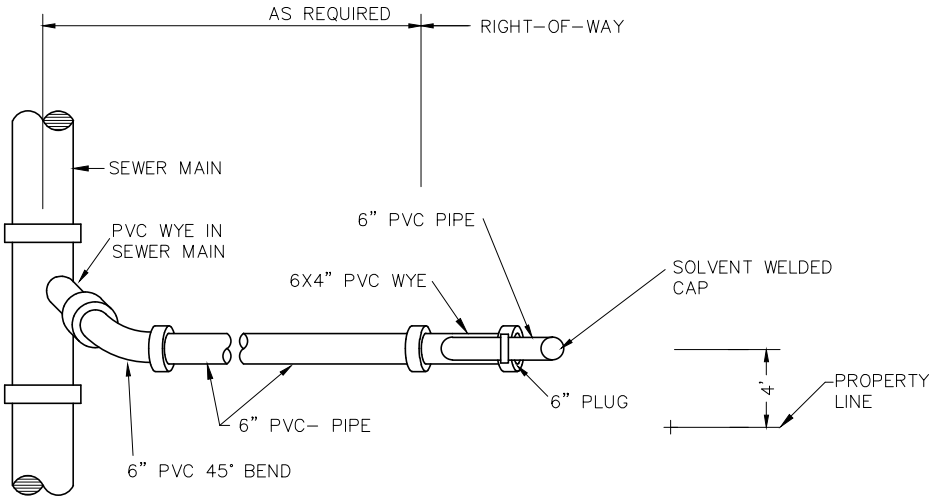

PLAN VIEW

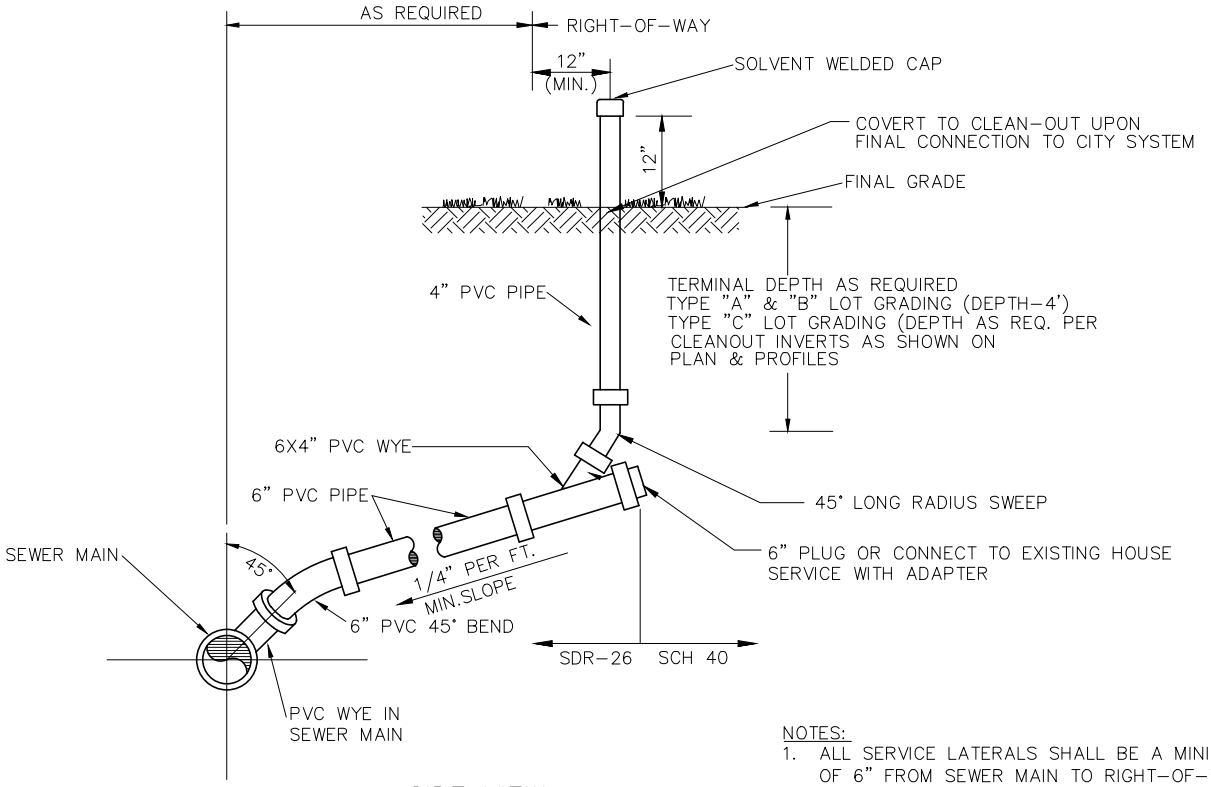

SIDE VIEW

NOTES:
1. ALL SERVICE LATERALS SHALL BE A MINIMUM OF 6" FROM SEWER MAIN TO RIGHT-OF-WAY LINE.
2. NO BENDS IN SERVICE LINE BETWEEN THE PROPERTY LINE AND THE WYE CONNECTOR.

SANITARY SEWER SERVICE

PVC SINGLE SERVICE

TAVARES
America's Seaplane City™

City of Tavares Standard Details

City of Tavares Utility Department
1000 Captain Haynes Road Tavares, FL 32778
Phone (352)742-6485 Fax (352)742-6110

DATE: MAR 2016

DETAIL S-5

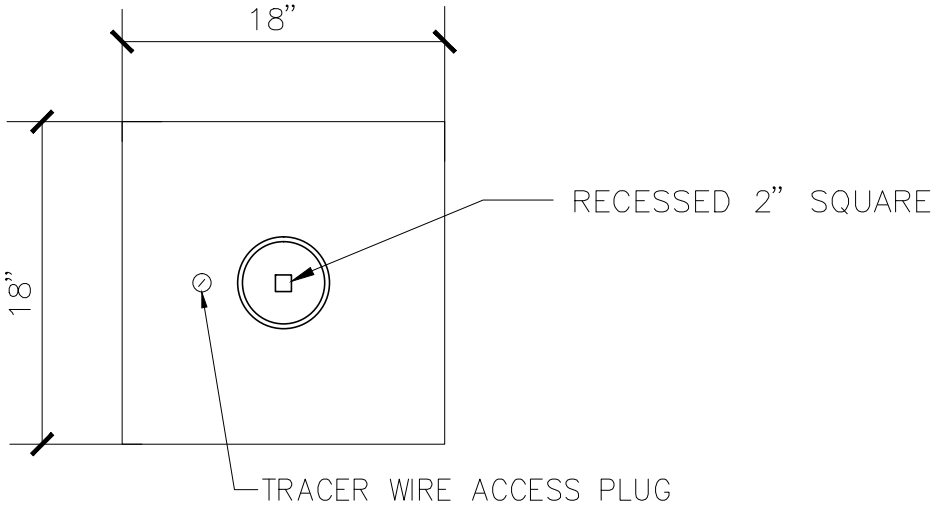

PLAN VIEW

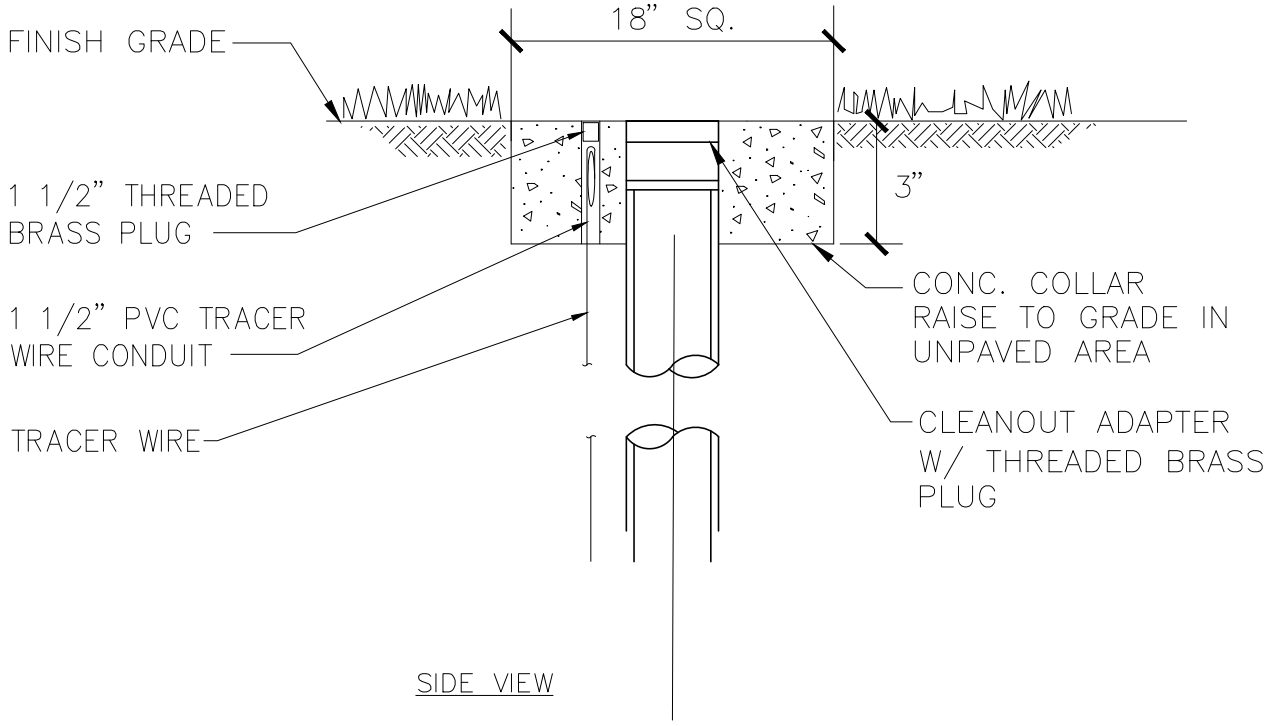

SIDE VIEW

SERVICE CLEANOUT

NOT TO SCALE

TAVARES America's Seaplane City™	**City of Tavares Standard Details** City of Tavares Utility Department 1000 Captain Haynes Road Tavares, FL 32778 Phone (352)742-6485 Fax (352)742-6110	DATE: MAR 2016 DETAIL S-6

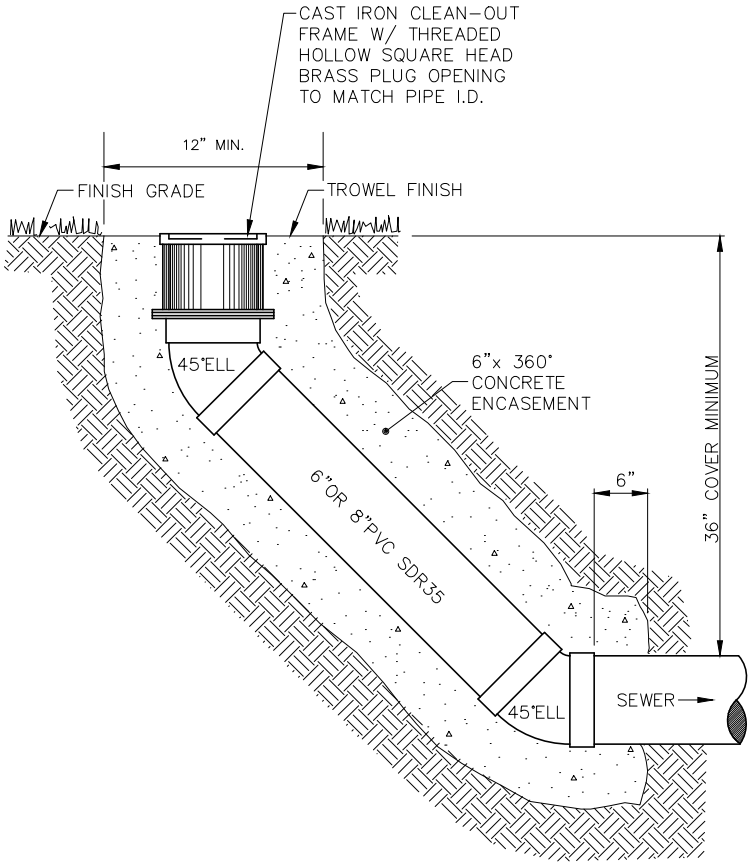

TRUNK LINE CLEAN-OUT DETAIL

NOT TO SCALE

TAVARES America's Seaplane City™	**City of Tavares Standard Details** City of Tavares Utility Department 1000 Captain Haynes Road Tavares, FL 32778 Phone (352)742-6485 Fax (352)742-6110	DATE: DEC. 2009 DETAIL S-8

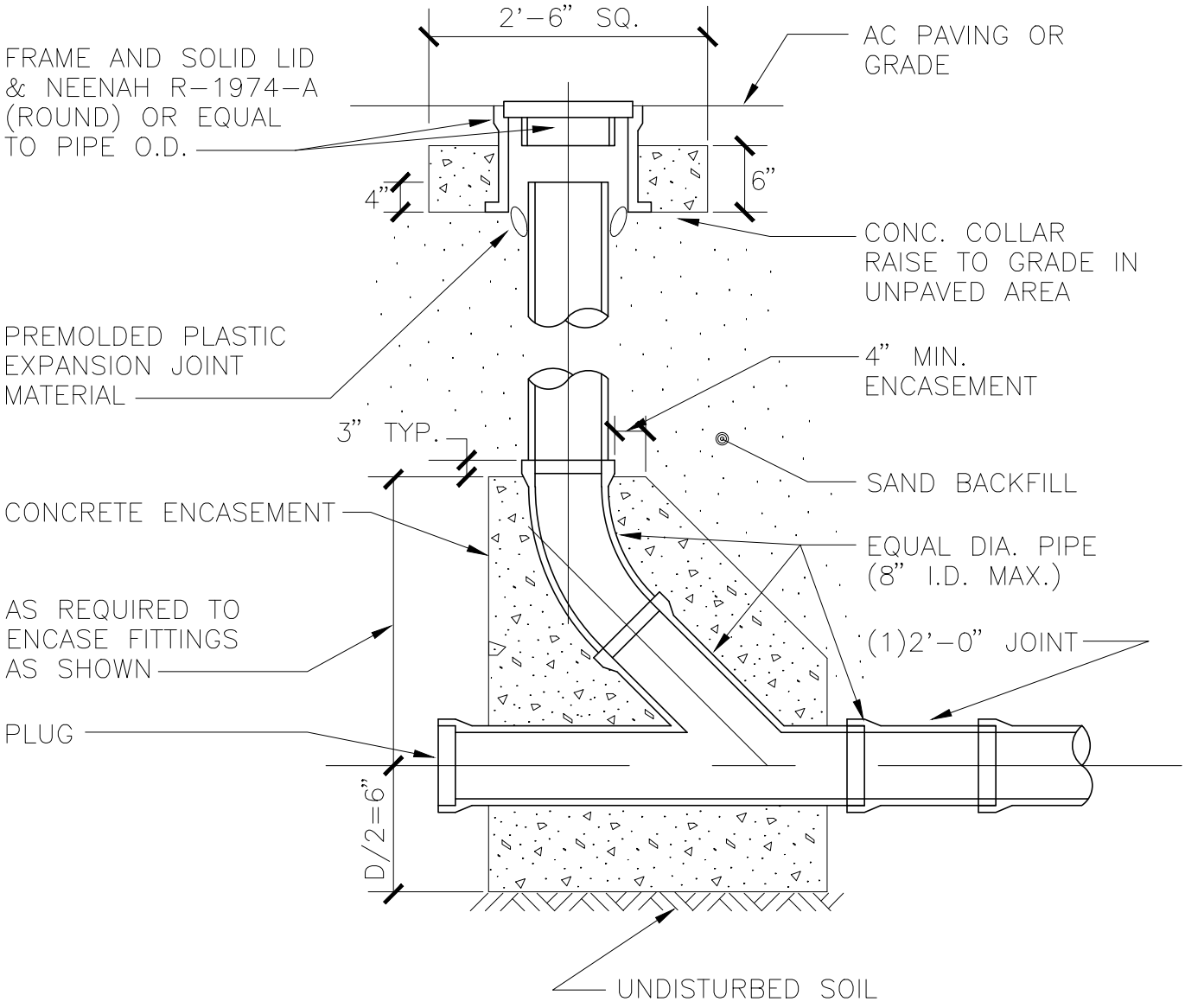

GRAVITY CLEANOUT

NOT TO SCALE

TAVARES America's Seaplane City™	**City of Tavares Standard Details** City of Tavares Utility Department 1000 Captain Haynes Road Tavares, FL 32778 Phone (352)742-6485 Fax (352)742-6110	DATE: DEC. 2009 DETAIL S-9

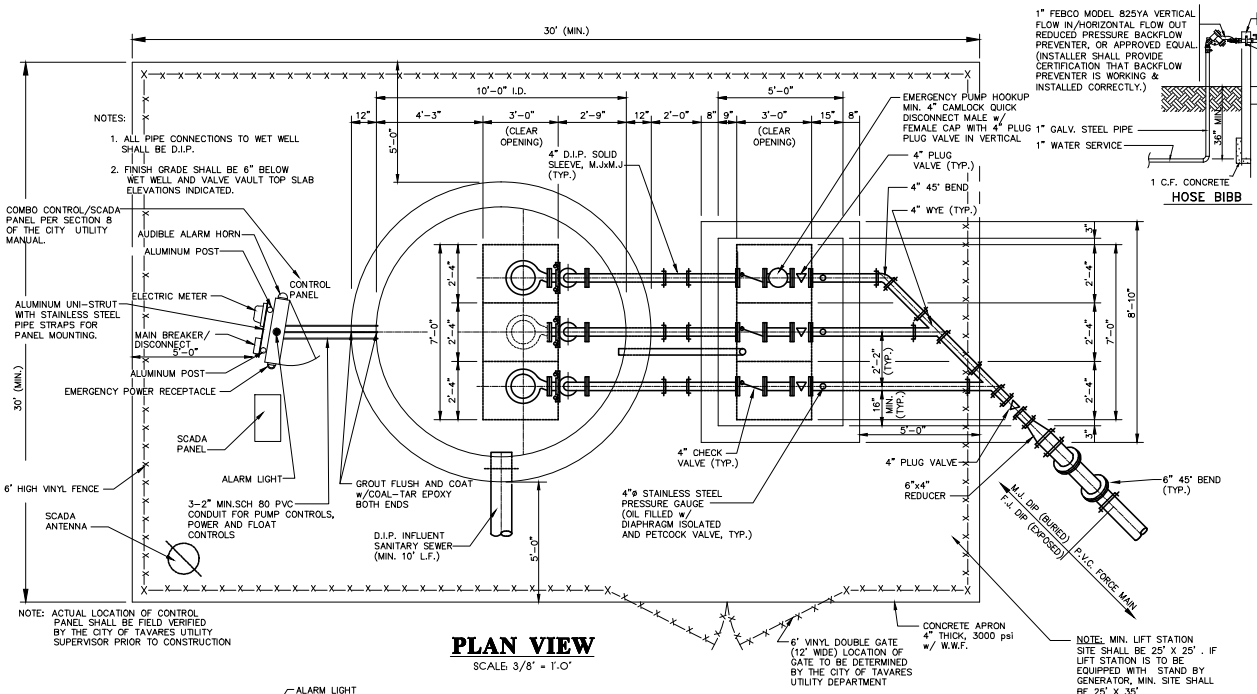

PLAN VIEW

SCALE: 3/8" = 1'-0"

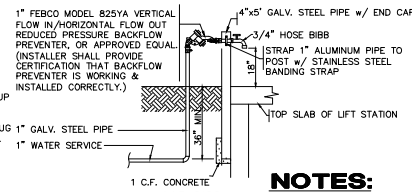

NOTES:

1. PUMPS: SHALL BE HYDROMATIC SUBMERSIBLE PUMPS.PUMPS SHALL HAVE (2) 2" STAINLESS STEEL GUIDE RAILS PER PUMP AND A BPI FRONT DUPLEX SYSTEM.
2. LEVEL CONTROLS: SHALL BE IN ACCORDANCE WITH SECTION 8 OF THE CITY UTILITY MANUAL.
3. WET WELL ACCESS COVER: SHALL HAVE CLEAR OPENING OF 36"x84" AS MANUFACTURED BY HALLIDAY PRODUCTS OR APPROVED EQUAL. ACCESS FRAME AND COVER SHALL HAVE A 1/4" THICK ONE-PIECE, MILL FINISH, EXTRUDED ALUMINUM FRAME, INCORPORATING A CONTINUOUS CONCRETE ANCHOR. DOOR PANEL(S) SHALL BE 1/4" ALUMINUM DIAMOND PLATE, REINFORCED TO WITHSTAND A LIVE LOAD OF 300 psf. DOOR(S) SHALL OPEN TO 90° AND AUTOMATICALLY LOCK WITH STAINLESS STEEL HOLD OPEN ARMS WITH ALUMINUM RELEASE HANDLES. DOOR(S) SHALL CLOSE FLUSH WITH THE FRAME. UNIT SHALL LOCK WITH A NONCORROSIVE LOCKING BAR. FRAME SHALL SUPPORT GUIDE RAILS AND CABLE HOLDER FOR ELECTRICAL WIRING. ALL ACCESS FRAME, COVER, AND HARDWARE SHALL BE CONSTRUCTED OF STAINLESS STEEL. ALL SURFACES IN CONTACT WITH CONCRETE SHALL HAVE A SHOP COAT OF ZINC CHROMATIC PRIMER APPROVED ALKALI RESISTANT PAINT OR APPROVED PROTECTIVE COATING. DOUBLE DOOR ACCESS COVERS SHALL HAVE REMOVABLE CENTER BAR SUPPORT. COVER MUST BE COMPATIBLE WITH PUMP.
4. VALVE VAULT ACCESS COVER: SHALL HAVE CLEAR OPENING OF 36"x84" ACCESS AS MANUFACTURED BY HALLIDAY PRODUCTS OR APPROVED EQUAL. ACCESS FRAME AND COVER SHALL HAVE A 1/4" THICK ONE-PIECE, MILL FINISH, EXTRUDED ALUMINUM FRAME, INCORPORATING A CONTINUOUS CONCRETE ANCHOR. DOOR PANEL(S) SHALL BE 1/4" ALUMINUM DIAMONDPLATE, REINFORCED TO WITHSTAND A LIVE LOAD OF 300 psf. DOOR(S) SHALL OPEN TO 90° AND AUTOMATICALLY LOCK WITH STAINLESS STEEL HOLD OPEN ARMS WITH ALUMINUM RELEASE HANDLES. DOOR(S) SHALL CLOSE FLUSH WITH THE FRAME. UNIT SHALL LOCK WITH A NONCORROSIVE LOCKING BAR. ALL ACCESS FRAME, COVER, HARDWARE, AND FASTENERS SHALL BE CONSTRUCTED OF 316 STAINLESS STEEL. ALL SURFACES IN CONTACT WITH CONCRETE SHALL HAVE A SHOP COAT OF ZINC CHROMATIC PRIMER, APPROVED ALKALI RESISTANT PAINT OR APPROVED PROTECTIVE COATING. DOUBLE DOOR ACCESS COVERS SHALL HAVE REMOVABLE CENTER BAR SUPPORT. COVER MUST BE COMPATIBLE WITH PUMP.
5. ELECTRICAL SERVICE ENTRANCE: PROVIDE METER SOCKET AND MAIN DISCONNECT MEETING APPLICABLE ELECTRIC CODES AND REQUIREMENTS OF POWER COMPANY. LIGHTNING AND VOLTAGE SURGE PROTECTION TO BE PROVIDED.**COST FOR THE ELECTRICAL SERVICE AND COORDINATION SHALL BE THE RESPONSIBILITY OF THE CONTRACTOR.
6. CONTROL PANEL: SHALL BE IN ACCORDANCE WITH SECTION 8 OF THE CITY UTILITY MANUAL. PANEL SHALL BE EQUIPPED WITH THREE, 2" X 6" ALUMINUM NIPPLES TO THE SEALOFFS, WITH SCH 80 PVC TO WET WELL.
7. PAINT: INSIDE AND OUTSIDE OF VALVE VAULT SHALL BE PAINTED WITH TWO COATS OF "POXITAR" OR EQUAL APPLIED AS PER MANUFACTURER'S RECOMMENDATIONS.
8. VALVE VAULT : PRECAST CONCRETE 60"x 84" (MINIMUM) INSIDE DIMENSIONS.
9. STEEL PLACED IN BOTTOM SLAB IS TO BE IDENTICAL TO THE TOP SLAB EXCEPT THAT DIAGONAL BARS AND OPENINGS ARE ELIMINATED, STEEL IS CONTINUOUS AND SLAB IS SOLID.
10. CONTRACTOR TO CONFIRM SERVICE ARRANGEMENTS WITH POWER COMPANY BEFORE COMMENCING WORK. CONTRACTOR TO RUN UNDERGROUND WIRING TO NEAREST TRANSFORMER OR HAND HOLE.
11. ALL FASTENERS ON FLANGES AND ETC. INSIDE WET WELL WILL BE STAINLESS STEEL.
12. DIMENSIONS BETWEEN CENTERLINE OF PIPES ARE STANDARD FOR PIPE SIZES SPECIFIED.
13. SHOP DRAWINGS OF ENTIRE INSTALLATION MUST BE APPROVED BY CITY PRIOR TO PLACEMENT OF ORDER.
14. PLUG VALVES SHALL BE SERIES 100, AS MANUFACTURED BY DEZURIK CORP., AND CLOW OR APPROVED EQUAL. VALVES SHALL BE CONSTRUCTED WITH RESILIENT FACED PLUGS. ON BY-PASS LINES, VALVES SHALL BE BURIED WITH ACCESS THROUGH CAST IRON VALVE BOXES. VALVES SHALL HAVE A 2" OPERATION NUT. ONE(1) 5' LONG VALVE WRENCH SHALL BE PROVIDED TO THE CITY OF TAVARES PER LIFT STATION. ALL PLUG VALVES 8" AND SMALLER SHALL BE 1/4 TURN TYPE.
15. ALL EXPOSED AND EMBEDDED CONDUITS TO BE SCHEDULE 80 PVC.
16. ALL EXPOSED METAL SHALL BE PAINTED WITH TWO (2) COATS OF EXTERIOR BLACK ENAMEL PAINT.
17. ALL EXTERNAL PIPING SHALL BE DUCTILE IRON CLASS 50 (FLANGED JOINT FOR EXPOSED PIPE & MECHANICAL JOINT FOR BURIED PIPE). ALL INTERNAL WET WELL PIPING FROM THE PUMP DISCHARGE ELBOW TO THE VALVE BOX SHALL BE MINIMUM SDR-11 HDPE.
18. ALL DIMENSIONS AND LOCATIONS OF UTILITIES TO BE FIELD VERIFIED BY CONTRACTOR.
19. PRESSURE GAUGES SHALL BE STAINLESS STEEL WITH STAINLESS STEEL DIAPHRAGM, LIQUID FILLED, 4" DIAMETER DIAL WITH 0-100 psi RANGE. GAUGES SHALL BE AS MANUFACTURED BY WKA, LOWER MOUNT, TYPE 233.30 AND DIAPHRAGMS SHALL BE AS MANUFACTURED BY HYETT, MODEL 43MCR-01 OR APPROVED EQUALS.
20. CHECK VALVES SHALL BE MUELLER, KENNEDY, AMERICAN-DARLING, OR DRESSER WITH OUTSIDE LEVER AND WEIGHT.
21. PADLOCKS FOR ACCESS COVERS AND CONTROL PANEL SHALL BE MASTER NO. 4 BRASS PADLOCK, KEYED ALIKE, FURNISH TWO(2) KEYS PER LOCK. BOLTS IN LOCKING DEVICE SHALL BE STAINLESS STEEL.
22. WET WELL TO BE H.D.P.E. LINED WITH AN AGRU SURE GRIP LINER OR APPROVED EQUAL, WITH A MINIMUM THICKNESS OF 2 MM, MECHANICALLY ANCHORED TO THE CONCRETE.ALL JOINTS SHALL BE EXTRUSION WELDED BY CERTIFIED WELDERS.
23. SOD ALL AREAS DISTURBED BY CONSTRUCTION.
24. ALL ALUMINUM SURFACES IN CONTACT WITH CONCRETE WILL REQUIRE SHOP COATING OF SUITABLE PROTECTIVE COATING TO RESIST CORROSION.
25. BYPASS PUMPING: CONTRACTOR SHALL BE RESPONSIBLE FOR ALL BYPASS PUMPING. A BYPASS PUMPING PLAN SHALL BE SUBMITTED AT THE TIME OR PERMIT APPLICATION TO THE ENVIRONMENTAL SERVICES DIRECTOR. CITIZEN CONSIDERATION WILL BE REVIEWED WHEN BYPASS PUMPING EQUIPMENT IS REQUIRED. SOUND ATTENUATING ENCLOSURES MAY BE REQUIRED, AT THE DISCRETION OF THE ENVIRONMENTAL SERVICES DIRECTOR.
26. FIELD TESTING: THE CONTRACTOR SHALL FURNISH THE SERVICES OF THE SYSTEM SUPPLIER'S SERVICEMAN, ALL SPECIAL TOOLS, CALIBRATION EQUIPMENT, AND LABOR TO PERFORM THE TESTS. CERTIFIED COPIES OF THE TESTS SHALL BE FURNISHED IN DUPLICATE TO THE CITY ENGINEER PRIOR TO FINAL APPROVAL.

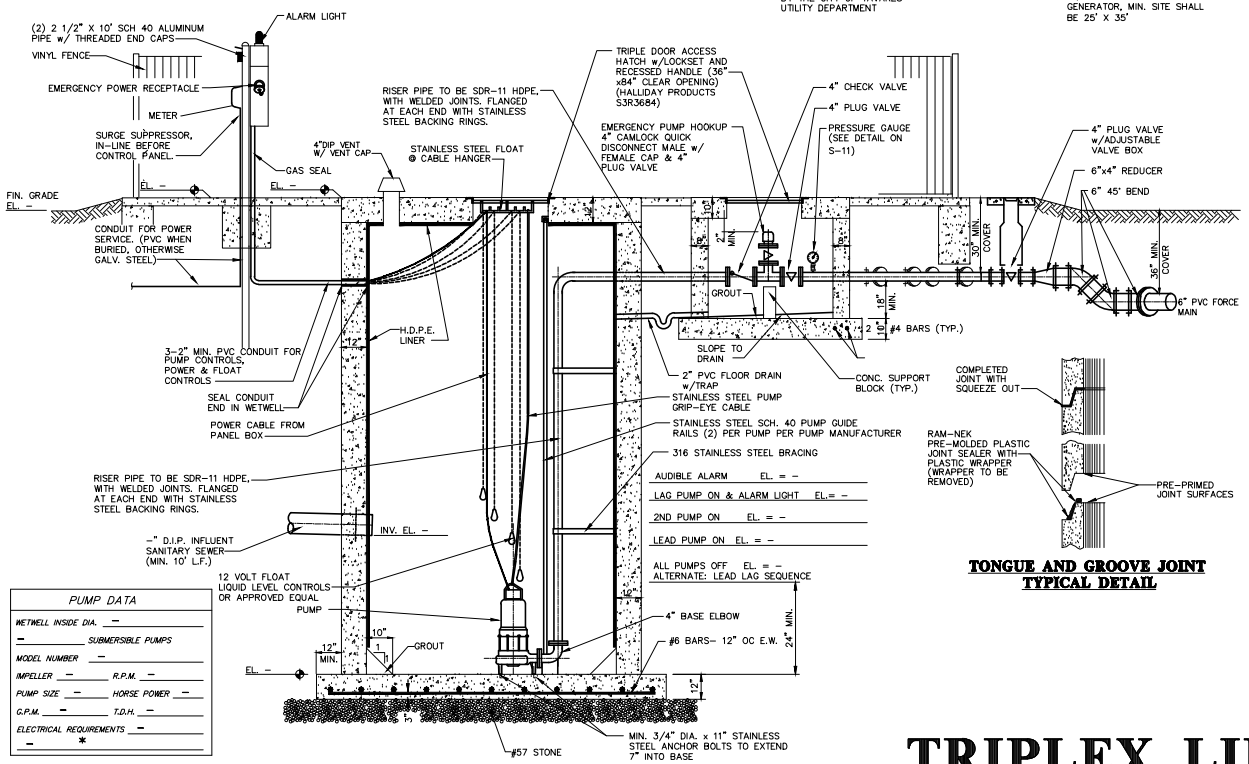

PUMP DATA	
WETWELL INSIDE DIA. –	
– SUBMERSIBLE PUMPS	
MODEL NUMBER –	
IMPELLER –	R.P.M. –
PUMP SIZE –	HORSE POWER –
G.P.M. –	T.D.H. –
ELECTRICAL REQUIREMENTS –	
– *	

*NOTE: ELECTRICAL REQUIREMENT TO BE VERIFIED BY CONTRACTOR.

SECTION

SCALE: 3/8" = 1'-0"

TONGUE AND GROOVE JOINT TYPICAL DETAIL

TRIPLEX LIFT STATION

DATE: DEC. 2009

DETAIL S-10

City of Tavares Standard Details

City of Tavares Utility Department
1000 Captain Haynes Road Tavares, FL 32778
Phone (352)742-6485 Fax (352)742-6110

TAVARES America's Seaplane City™

NOTES:

1. FINISH GRADE SHALL BE 6" BELOW WET WELL AND VALVE VAULT TOP SLAB ELEVATIONS INDICATED.

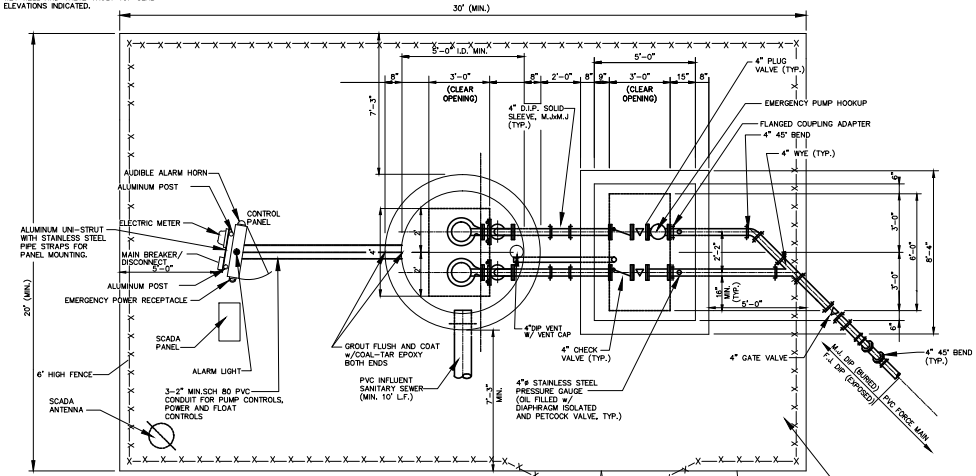

NOTE: ACTUAL LOCATION OF CONTROL AND SCADA PANEL SHALL BE FIELD VERIFIED BY THE CITY OF TAVARES UTILITY SUPERVISOR PRIOR TO CONSTRUCTION

PLAN VIEW

NTS

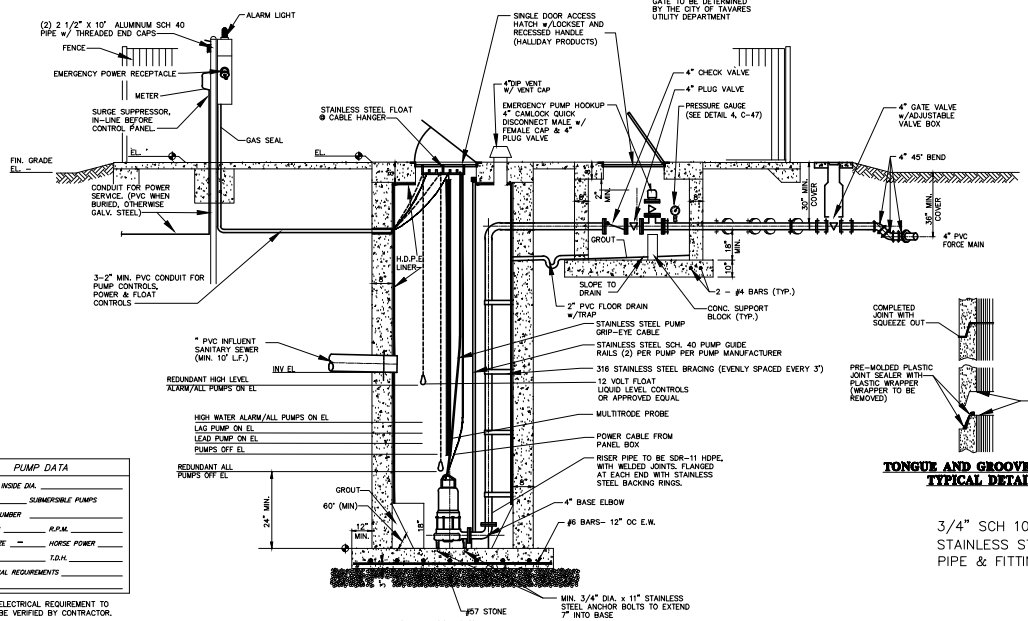

PUMP DATA	
WETWELL INSIDE DIA.	
SUBMERSIBLE PUMPS	
MODEL NUMBER	
IMPELLER	R.P.M.
PUMP SIZE	HORSE POWER
G.P.M.	T.D.H.
ELECTRICAL REQUIREMENTS	

*NOTE: ELECTRICAL REQUIREMENT TO BE VERIFIED BY CONTRACTOR.

SECTION

NTS

DUPLEX LIFT STATION

NOTES:

1. PUMPS: SHALL BE HYDROMATIC SUBMERSIBLE PUMPS.PUMPS SHALL HAVE (2) 2" STAINLESS STEEL GUIDE RAILS PER PUMP AND A BPI FRONT DUPLEX SYSTEM.
2. LEVEL CONTROLS: SHALL BE IN ACCORDANCE WITH SECTION 8 OF THE CITY UTILITY MANUAL.
3. WET WELL ACCESS COVER: SHALL HAVE CLEAR OPENING OF 36"x48" AS MANUFACTURED BY HALLIDAY PRODUCTS OR APPROVED EQUAL. ACCESS FRAME AND COVER SHALL HAVE A 1/4" THICK ONE-PIECE, MILL FINISH, EXTRUDED ALUMINUM FRAME, INCORPORATING A CONTINUOUS CONCRETE ANCHOR. DOOR PANEL(S) SHALL BE 1/4" ALUMINUM DIAMOND PLATE, REINFORCED TO WITHSTAND A LIVE LOAD OF 300 psf. DOOR(S) SHALL OPEN TO 90° AND AUTOMATICALLY LOCK WITH STAINLESS STEEL HOLD OPEN ARMS WITH ALUMINUM RELEASE HANDLES. DOOR(S) SHALL CLOSE FLUSH WITH THE FRAME. UNIT SHALL LOCK WITH A NONCORROSIVE LOCKING BAR. FRAME SHALL SUPPORT GUIDE RAILS AND CABLE HOLDER FOR ELECTRICAL WIRING. ALL ACCESS FRAME, COVER, AND HARDWARE SHALL BE CONSTRUCTED OF STAINLESS STEEL. ALL SURFACES IN CONTACT WITH CONCRETE SHALL HAVE A SHOP COAT OF ZINC CHROMATIC PRIMER APPROVED ALKALI RESISTANT PAINT OR APPROVED PROTECTIVE COATING. DOUBLE DOOR ACCESS COVERS SHALL HAVE REMOVABLE CENTER BAR SUPPORT. COVER MUST BE COMPATIBLE WITH PUMP.
4. VALVE VAULT ACCESS COVER: SHALL HAVE CLEAR OPENING OF 36"x72" ACCESS AS MANUFACTURED BY HALLIDAY PRODUCTS OR APPROVED EQUAL. ACCESS FRAME AND COVER SHALL HAVE A 1/4" THICK ONE-PIECE, MILL FINISH, EXTRUDED ALUMINUM FRAME, INCORPORATING A CONTINUOUS CONCRETE ANCHOR. DOOR PANEL(S) SHALL BE 1/4" ALUMINUM DIAMOND PLATE, REINFORCED TO WITHSTAND A LIVE LOAD OF 300 psf. DOOR(S) SHALL OPEN TO 90° AND AUTOMATICALLY LOCK WITH STAINLESS STEEL HOLD OPEN ARMS WITH ALUMINUM RELEASE HANDLES. DOOR(S) SHALL CLOSE FLUSH WITH THE FRAME. UNIT SHALL LOCK WITH A NONCORROSIVE LOCKING BAR. ALL ACCESS FRAME, COVER, HARDWARE, AND FASTENERS SHALL BE CONSTRUCTED OF 316 STAINLESS STEEL. ALL SURFACES IN CONTACT WITH CONCRETE SHALL HAVE A SHOP COAT OF ZINC CHROMATIC PRIMER, APPROVED ALKALI RESISTANT PAINT OR APPROVED PROTECTIVE COATING. DOUBLE DOOR ACCESS COVERS SHALL HAVE REMOVABLE CENTER BAR SUPPORT. COVER MUST BE COMPATIBLE WITH PUMP.
5. ELECTRICAL SERVICE ENTRANCE: PROVIDE METER SOCKET AND MAIN DISCONNECT MEETING APPLICABLE ELECTRIC CODES AND REQUIREMENTS OF POWER COMPANY. LIGHTNING AND VOLTAGE SURGE PROTECTION TO BE PROVIDED.*COST FOR THE ELECTRICAL SERVICE AND COORDINATION SHALL BE THE RESPONSIBILITY OF THE CONTRACTOR.
6. PAINT: INSIDE AND OUTSIDE OF VALVE VAULT SHALL BE PAINTED WITH TWO COATS OF "POXITAR" OR EQUAL APPLIED AS PER MANUFACTURER'S RECOMMENDATIONS.
7. VALVE VAULT : PRECAST CONCRETE 60"x 84" (MINIMUM) INSIDE DIMENSIONS.
8. STEEL PLACED IN BOTTOM SLAB IS TO BE IDENTICAL TO THE TOP SLAB EXCEPT THAT DIAGONAL BARS AND OPENINGS ARE ELIMINATED. STEEL IS CONTINUOUS AND SLAB IS SOLID.
9. CONTRACTOR TO CONFIRM SERVICE ARRANGEMENTS WITH POWER COMPANY BEFORE COMMENCING WORK. CONTRACTOR TO RUN UNDERGROUND WIRING TO NEAREST TRANSFORMER OR HAND HOLE.
10. ALL FASTENERS ON FLANGES AND ETC. INSIDE WET WELL WILL BE STAINLESS STEEL.
11. DIMENSIONS BETWEEN CENTERLINE OF PIPES ARE STANDARD FOR PIPE SIZES SPECIFIED.
12. SHOP DRAWINGS OF ENTIRE INSTALLATION MUST BE APPROVED BY CITY PRIOR TO PLACEMENT OF ORDER.
13. PLUG VALVES SHALL BE SERIES 100, AS MANUFACTURED BY DEZURIK CORP., AND CLOW OR APPROVED EQUAL. VALVES SHALL BE CONSTRUCTED WITH RESILIENT FACED PLUGS. ON BY-PASS LINES, VALVES SHALL BE BURIED WITH ACCESS THROUGH CAST IRON VALVE BOXES. VALVES SHALL HAVE A 2" OPERATION NUT. ONE(1) 5' LONG VALVE WRENCH SHALL BE PROVIDED TO THE CITY OF TAVARES PER LIFT STATION. ALL PLUG VALVES 8" AND SMALLER SHALL BE 1/4 TURN TYPE.
14. ALL EXPOSED AND EMBEDDED CONDUITS TO BE SCHEDULE 80 PVC.
15. ALL EXPOSED METAL SHALL BE PAINTED WITH TWO (2) COATS OF EXTERIOR BLACK ENAMEL PAINT.
16. ALL EXTERNAL PIPING SHALL BE DUCTILE IRON CLASS 50 (FLANGED JOINT FOR EXPOSED PIPE & MECHANICAL JOINT FOR BURIED PIPE). ALL INTERNAL WET WELL PIPING FROM THE PUMP DISCHARGE ELBOW TO THE VALVE BOX SHALL BE MINIMUM SDR-11 HDPE.
17. ALL DIMENSIONS AND LOCATIONS OF UTILITIES TO BE FIELD VERIFIED BY CONTRACTOR.
18. PRESSURE GAUGES SHALL BE STAINLESS STEEL WITH STAINLESS STEEL DIAPHRAGM, LIQUID FILLED, 4" DIAMETER DIAL WITH 0-100 psi RANGE. GAUGES SHALL BE AS MANUFACTURED BY WIKA, BACK MOUNT, AND DIAPHRAGMS SHALL BE AS MANUFACTURED BY HYETT, MODEL 43MOR-01 OR APPROVED EQUALS.
19. CHECK VALVES SHALL BE MUELLER, KENNEDY, AMERICAN-DARLING, OR DRESSER WITH OUTSIDE LEVER AND WEIGHT.
20. PADLOCKS FOR ACCESS COVERS AND CONTROL PANEL SHALL BE MASTER NO. 4 BRASS PADLOCK, KEYED ALIKE, FURNISH TWO(2) KEYS PER LOCK. BOLTS IN LOCKING DEVICE SHALL BE STAINLESS STEEL.
21. WET WELL TO BE H.D.P.E. LINED WITH AN AGRU SURE GRIP LINER OR APPROVED EQUAL WITH A MINIMUM THICKNESS OF 2 MIL MECHANICALLY ANCHORED TO THE CONCRETE.ALL JOINTS SHALL BE EXTRUSION WELDED BY CERTIFIED WELDERS.
22. SOD ALL AREAS DISTURBED BY CONSTRUCTION.
23. ALL ALUMINUM SURFACES IN CONTACT WITH CONCRETE WILL REQUIRE SHOP COATING OF SUITABLE PROTECTIVE COATING TO RESIST CORROSION.
24. BYPASS PUMPING: CONTRACTOR SHALL BE RESPONSIBLE FOR ALL BYPASS PUMPING. A BYPASS PUMPING PLAN SHALL BE SUBMITTED AT THE TIME OR PERMIT APPLICATION TO THE ENVIRONMENTAL SERVICES DIRECTOR. CITIZEN CONSIDERATION WILL BE REVIEWED WHEN BYPASS PUMPING EQUIPMENT IS REQUIRED. SOUND ATTENUATING ENCLOSURES MAY BE REQUIRED, AT THE DISCRETION OF THE ENVIRONMENTAL SERVICES DIRECTOR.
25. FIELD TESTING: THE CONTRACTOR SHALL FURNISH THE SERVICES OF THE SYSTEM SUPPLIER'S SERVICEMAN, ALL SPECIAL TOOLS, CALIBRATION EQUIPMENT, AND LABOR TO PERFORM THE TESTS. CERTIFIED COPIES OF THE TESTS SHALL BE FURNISHED IN DUPLICATE TO THE CITY ENGINEER PRIOR TO FINAL APPROVAL.

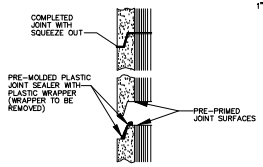

TONGUE AND GROOVE JOINT TYPICAL DETAIL

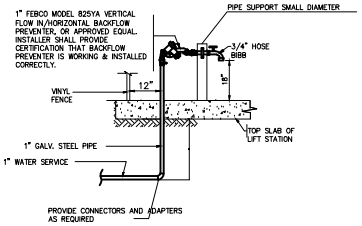

HOSE BIBB DETAIL

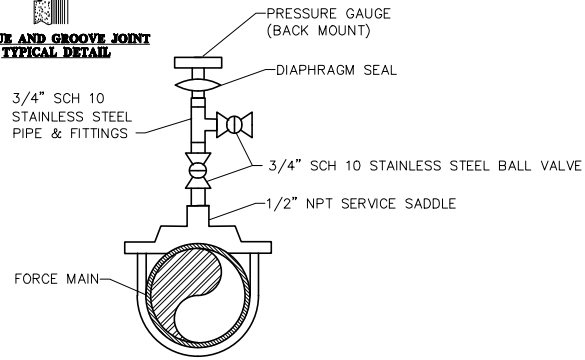

PRESSURE GAUGE DETAIL

DATE: MAR 2016

DETAIL S-11

City of Tavares Standard Details

City of Tavares Utility Department
1000 Captain Haynes Road Tavares, FL 32778
Phone (352)742-6485 Fax (352)742-6110

TAVARES America's Seaplane City™

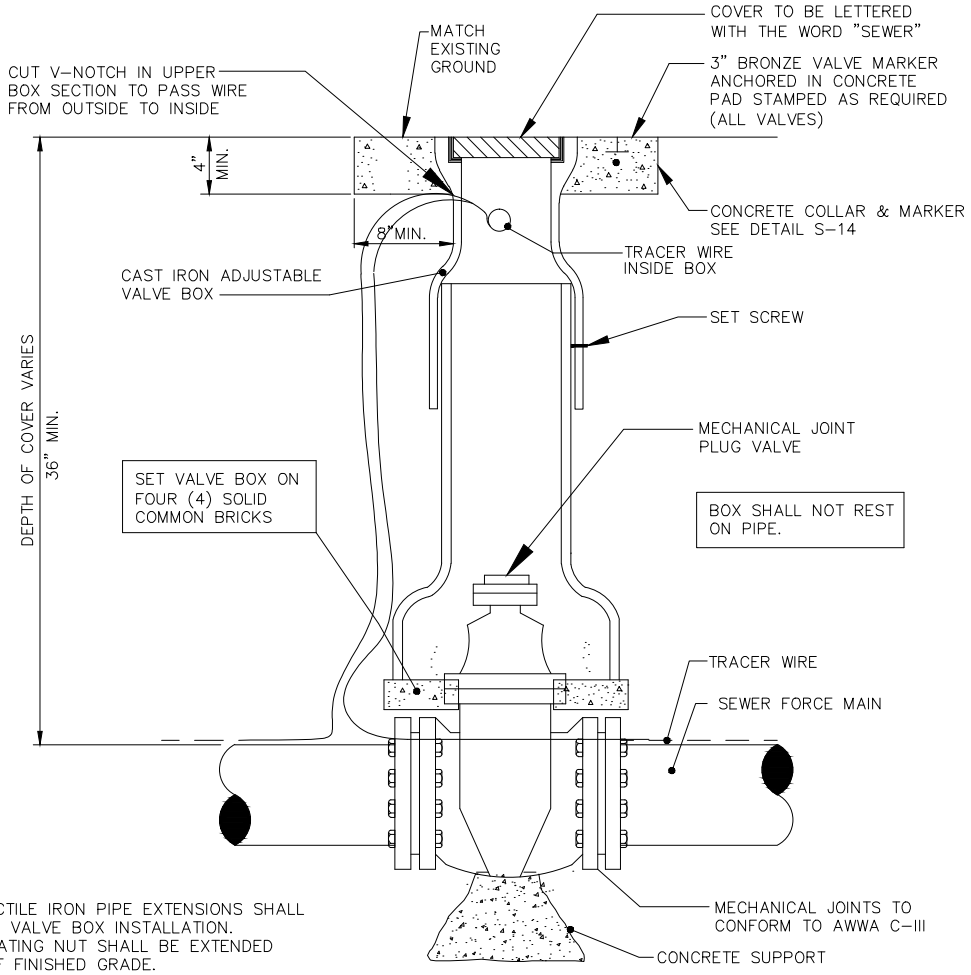

NOTES

1. PVC PIPE OR DUCTILE IRON PIPE EXTENSIONS SHALL NOT BE USED ON VALVE BOX INSTALLATION.
2. THE VALVE ACTUATING NUT SHALL BE EXTENDED WITHIN 2 FEET OF FINISHED GRADE.
3. PROVIDE A PLASTIC DEBRIS SHIELD/ALIGNMENT RING WHICH INSTALLS BELOW THE VALVE ACTUATING NUT. THIS SHIELD SHALL CENTER THE RISER PIPE BOX OVER THE ACTUATING NUT AND MINIMIZE INFILTRATION.
4. FOR NEW CONSTRUCTION, THE VALVE BOX SHALL BE ADJUSTED TO MIDRANGE TO ALLOW FOR FUTURE BOX ADJUSTMENTS.
5. VALVE BOX IS TYLER UNION NO. 6850, OR APPROVED EQUAL, TWO PIECE SCREW TYPE.

PLUG VALVE & BOX DETAIL

NOT TO SCALE

TAVARES
America's Seaplane City™

City of Tavares Standard Details

City of Tavares Utility Department
1000 Captain Haynes Road Tavares, FL 32778
Phone (352)742-6485 Fax (352)742-6110

DATE: MAR 2016

DETAIL S-12

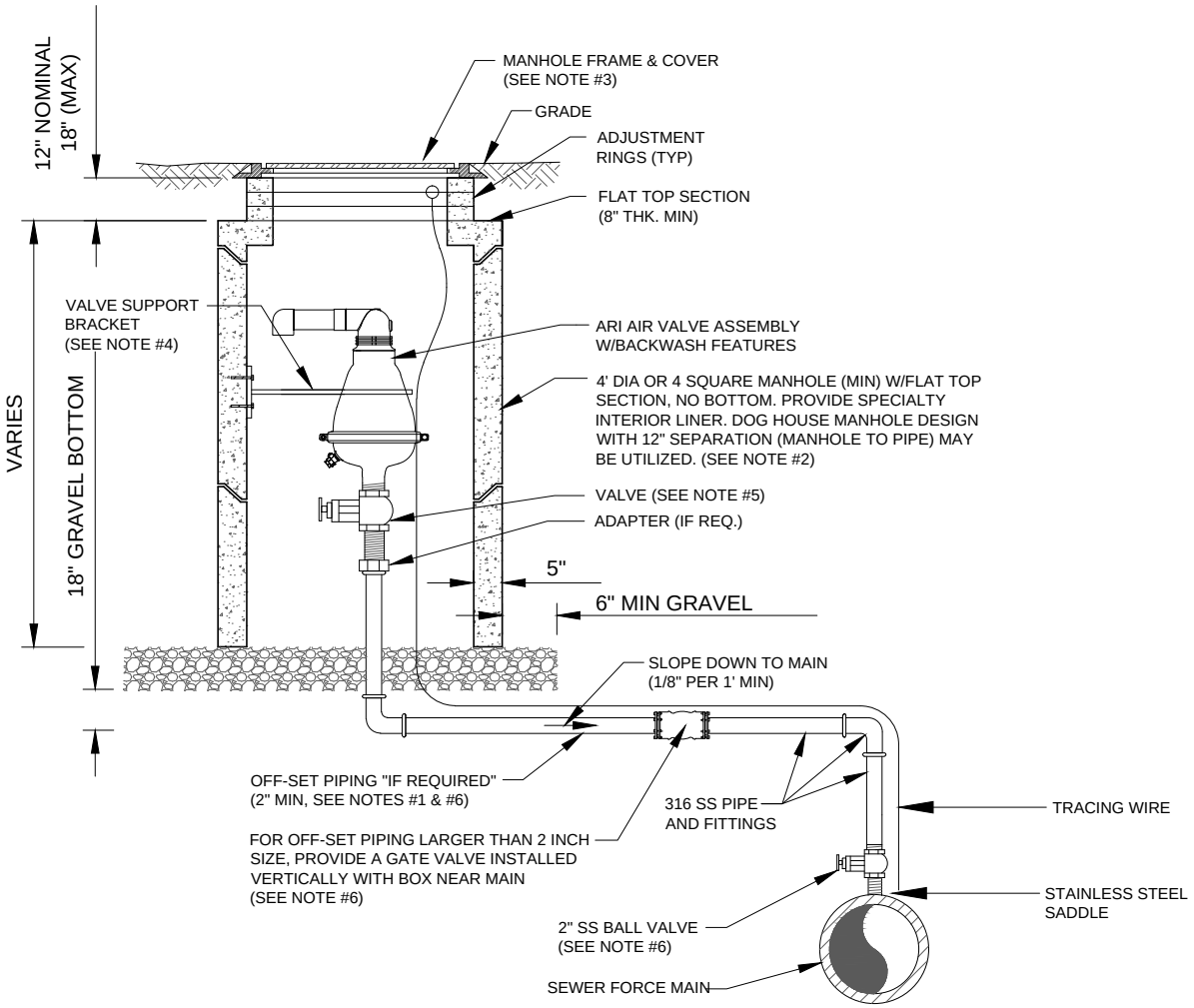

NOTES:

1. THE AIR ASSEMBLY MANHOLE SHALL BE LOCATED OUTSIDE OF THE ROADWAY PAVEMENT AREA. IF OFF-SET PIPING IS REQUIRED, THE PIPING SHALL BE 2 INCH MINIMUM, (SAME SIZE AS AIR VALVE INLET). FOR PIPE SIZES 3 INCH AND SMALLER: PIPING SHALL BE 316 STAINLESS STEEL SCH.40, STD GRADE, THREADED. FOR PIPE SIZES 4 INCH AND LARGER: PIPING SHALL BE 316 STAINLESS STEEL SCH. 10 (MIN), WELDED.

2. THE CONCRETE MANHOLE SHALL INCLUDE A LINER TO BE INSTALLED ON THE INTERIOR SURFACES INCLUDING THE RISER SECTION TOP AND THE ADJUSTMENT RINGS. A BITUMINOUS WATERPROOFING MATERIAL SHALL BE PROVIDED ON THE OUTSIDE SURFACES OF THE MANHOLE.

3. FRAME AND COVER SHALL BE CITY STANDARD. THE COVER SHALL HAVE NO GASKET TO ALLOW AIR TO EXIT VAULT (REMOVE GASKET IF NECESSARY FROM THE UNDER SIDE OF STANDARD COVER). THE COVER (WHEN FLIPPED OPEN) MUST CLEAR THE AIR VALVE ASSEMBLY AT ALL TIMES OR A SQUARE TOP WITH ALUMINUM DOOR SHALL BE PROVIDED (NON-TRAFFIC LOCATIONS ONLY).

4. A VALVE SUPPORT BRACKET IS ONLY REQUIRED FOR ASSEMBLIES WHICH INCLUDE OFF-SET PIPING. THE BRACKET SHALL BE WELDED AND FABRICATED FROM ALL 316 STAINLESS STEEL MATERIALS AND INCLUDE 6" x 6" x ⅜" THICK END PLATES (CONTOURED TO MATCH ATTACHING SURFACES), 3" ANGLE IRON FOR SUPPORT ARM AND TWO U-BOLTS ⅝" DIA TO ATTACH AROUND AIR VALVE. SECURE TO CONCRETE MANHOLE WITH FOUR ½" DIA X 2" LONG S/S ANCHOR (MIN). MODIFY THE ABOVE AS REQUIRED TO FIT SPECIFIC AIR VALVE AND TO ASSURE A SOLID SUPPORT BRACKET.

5. FOR PIPE SIZES 3 INCH AND SMALLER, PROVIDE A STAINLESS STEEL BALL VALVE (2" MIN). FOR PIPE SIZES 4 INCH AND LARGER, PROVIDE A FLANGED PLUG VALVE. (LEVER ARM OPERATOR) SEE SPECIFICATION FOR ADDITIONAL REQUIREMENTS.

6. FOR A 2" AIR VALVE, PROVIDE 2" STAINLESS STEEL BALL VALVE AT THE MAIN. FOR AIR VALVES LARGER THAN 2" SIZE, PROVIDE A TAPPING SLEEVE OR DUCTILE IRON TEE FITTING. ALSO, FOR OFF-SET PIPING LARGER THAN 2 INCH SIZE, PROVIDE A GATE VALVE (INSTALLED VERTICALLY NEAR MAIN WITH A GEAR ACTUATOR). SEE SPECIFICATIONS FOR ADDITIONAL REQUIREMENTS.

AIR VALVE ASSEMBLY INSIDE MANHOLE

TAVARES
America's Seaplane City™

City of Tavares Standard Details

City of Tavares Utility Department
1000 Captain Haynes Road Tavares, FL 32778
Phone (352)742-6485 Fax (352)742-6110

DATE: MAR 2016

DETAIL S-13

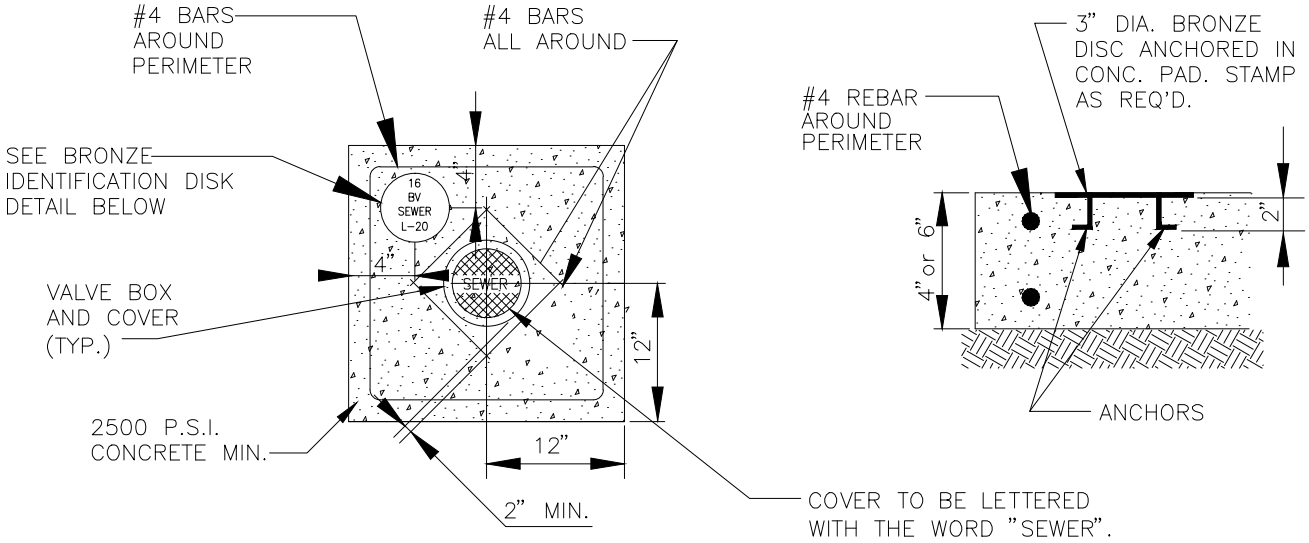

NOTE:

1. BRONZE IDENTIFICATION DISC SHALL BE REQUIRED FOR ALL VALVES.
2. 6" THICK CONCRETE PAD IN ROADWAY OR PAVED AREAS.

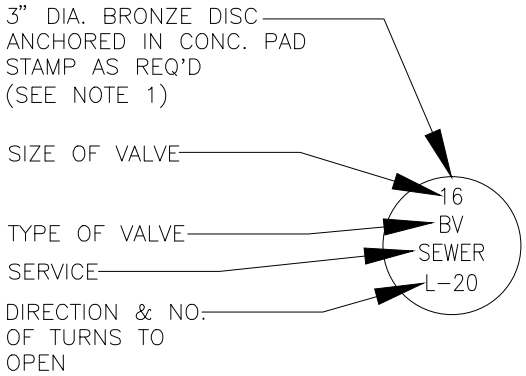

BRONZE IDENTIFICATION DISC DETAIL

VALVE COLLAR DETAIL

TAVARES America's Seaplane City™	**City of Tavares Standard Details** City of Tavares Utility Department 1000 Captain Haynes Road Tavares, FL 32778 Phone (352)742-6485 Fax (352)742-6110	DATE: MAR 2016 DETAIL S-14

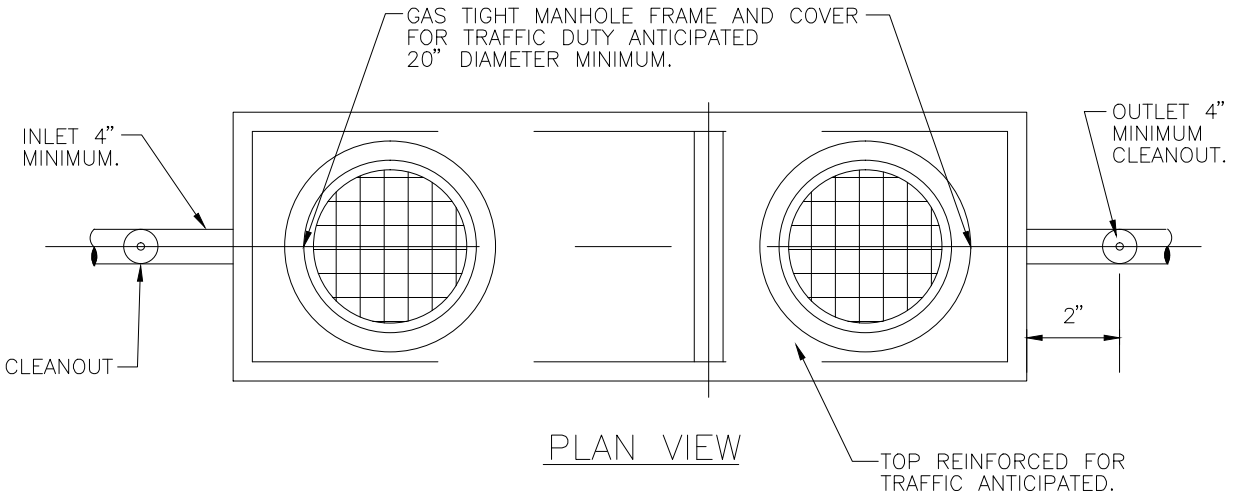

PLAN VIEW

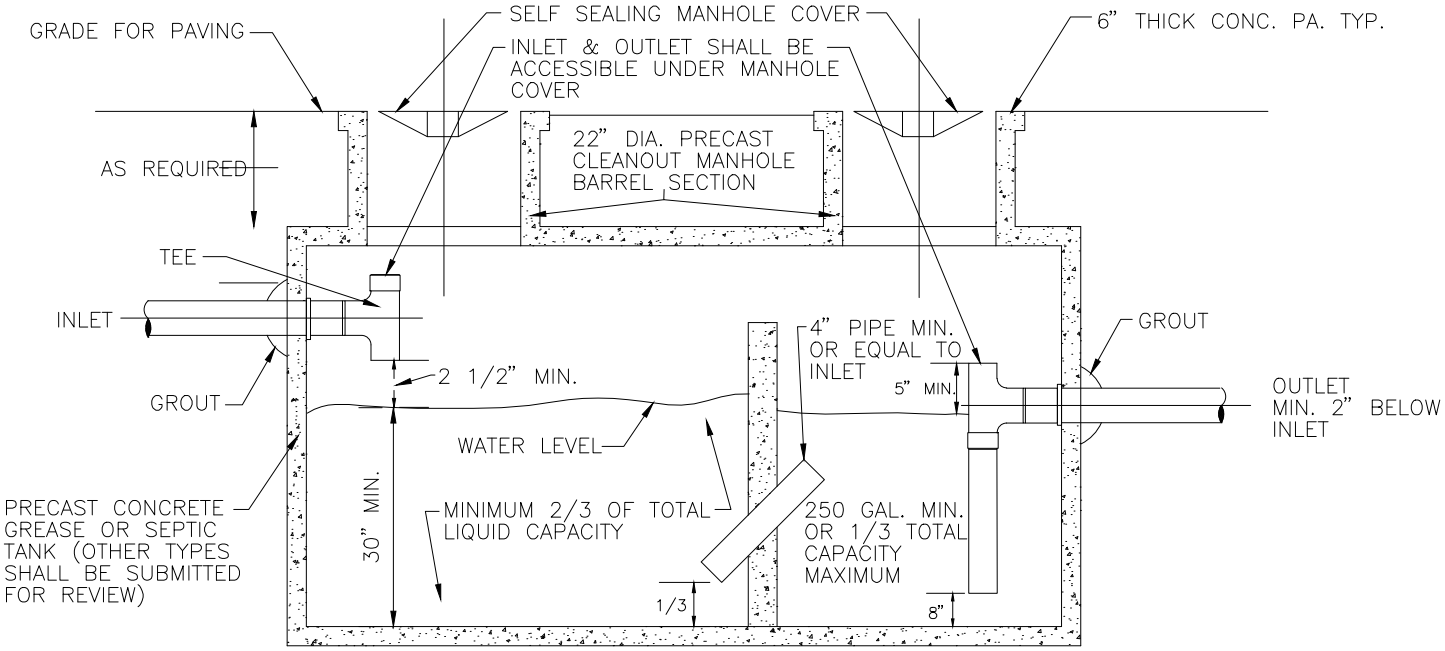

SECTION

NOTES:

STRUCTURAL DESIGN OF GREASE TRAP SHALL BE IN ACCORDANCE WITH CHAPTER 10d-5 OF FLORIDA ADMINISTRATIVE CODES.

DESIGN CALCULATIONS

(S)X(GS)X(HR/12)X(LF) = EFFECTIVE CAPACITY OF GREASE TRAP IN GALLONS

(S) = NUMBER OF SEATS IN DINING AREA

(GS) = GALLONS OF WASTE WATER PER SEAT (USE 25 GALLONS)

(HR) = NUMBERS OF HOURS ESTABLISHMENT IS OPEN

(LF) = LOADING FACTIOR-(1.25 WITH INTERSTATE HIGHWAYS, 1.00 OTHER FREEWAYS, 1.00 RECREATIONAL AREAS, 0.80 MAIN HIGHWAYS AND 0.50 OTHER HIGHWAYS)

GREASE TRAP

NOT TO SCALE

NOTES:

1. ACCESS FOR MONITORING THE INLET AND OUTLET PIPE FITTINGS OR BAFFLES SHALL BE PROVIDED FROM MANHOLES. CLEANOUTS SHALL BE INSTALLED BEFORE THE FIRST GREASE INTERCEPTOR AND WITHIN TWO FEET AFTER THE LAST INTERCEPTOR IN THE SERIES.
2. GREASE INTERCEPTOR (OR INTERCEPTORS) SHALL BE DESIGNED TO PRODUCE A CLARIFIED EFFLUENT ACCEPTABLE TO THE CITY OF TAVARES STANDARDS.

TAVARES America's Seaplane City™

City of Tavares Standard Details

City of Tavares Utility Department
1000 Captain Haynes Road Tavares, FL 32778
Phone (352)742-6485 Fax (352)742-6110

DATE: DEC. 2009

DETAIL S-15