AGENDA SUMMARY
TAVARES CITY COUNCIL
DATE OF MEETING: August 3, 2016

AGENDA TAB NO. 8

SUBJECT TITLE: Resolution 2016-13 – Approval to Authorize the execution and delivery of a Financing Documents for the cost of constructing a Public Safety Complex

---

OBJECTIVE:

To request City Council Approval of Resolution 2016-13, and Council Authorization to execute financing documents for the cost of acquiring capital equipment and the cost of various capital improvements.

SUMMARY:

On July 20, 2016, the City Council awarded RFP #2016-0014 to Florida Community Trust Bank for financing to acquire, design, engineer, bid, oversee, construct as well as fund other related improvements. A summary of the loan terms are as listed below:

- Loan Amount: $11,250,000 (includes capital project costs and cost of issuance)
- Non-bank Qualified debt
- Rate – 2.95%
- Term – 10 Years
- No Prepayment Penalty
- Term – 16 years with maturity on October 1, 2032
- Pledge of Infrastructure Sales Tax Revenues
- Semi-annual loan payments on April 1st and October 1st, beginning October 1, 2016

Resolution No. ,**2016-13** has been prepared by the City's Bond Council, Mike Williams of Akerman LLP, for City Council's approval which authorizes the Mayor, the City Administrator and staff to execute all necessary financing documents with the terms stated above.

OPTIONS:

1. Move to Approve Resolution No. 2016-13 which authorizes debt issuance in the amount of $11,250,000 and authorize the Mayor, City Administrator, and staff to execute all related financing documents.

2. Do Not Approve.

STAFF RECOMMENDATION:

Option 1: **Move to Approve** Resolution No. 2016-13 which authorizes debt issuance in the amount of $11,250,000 and authorize the Mayor, City Administrator, and staff to execute all related financing documents.

FISCAL IMPACT:

Lease/loan proceeds will be used to acquire, design, engineer, bid, oversee, construct as well as fund other related improvements. (*includes reimbursements for expenses related to same incurred after approval of Reimbursement Resolution No. 2016-03)*

Semi-annual debt service payments will begin in Fiscal Year 2016, and are included in the 2016 Proposed Budget.

LEGAL SUFFICIENCY: The Resolution and related documents have been prepared by Bond Council and the City Attorney.

RESOLUTION NO. 2016-13

A RESOLUTION OF THE CITY OF TAVARES, FLORIDA ACCEPTING THE PROPOSAL OF FLORIDA COMMUNITY BANK, N.A. TO PURCHASE THE CITY'S NOT TO EXCEED $11,250,000 INFRASTRUCTURE SALES SURTAX REVENUE NOTE, SERIES 2016, TO FINANCE THE CITY'S COST OF ACQUIRING AND/OR CONSTRUCTING A PUBLIC SAFETY COMPLEX INCLUDING A FIRE STATION AND POLICE STATION AND RELATED IMPROVEMENTS; AUTHORIZING THE EXECUTION AND DELIVERY OF A LOAN AGREEMENT WITH SAID BANK TO SECURE THE PAYMENT OF THE 2016 NOTE; PROVIDING FOR THE PAYMENT OF THE 2016 NOTE FROM AMOUNTS RECEIVED BY THE CITY FROM THE LEVY BY THE BOARD OF COUNTY COMMISSIONS OF LAKE COUNTY, FLORIDA OF A ONE CENT INFRASTRUCTURE SALES SURTAX PURSUANT TO SECTION 212.055(2), FLORIDA STATUTES, ALL AS PROVIDED IN THE LOAN AGREEMENT; AUTHORIZING THE PROPER OFFICIALS OF THE CITY TO DO ANY OTHER ADDITIONAL THINGS DEEMED NECESSARY OR ADVISABLE IN CONNECTION WITH THE EXECUTION OF THE LOAN AGREEMENT, THE 2016 NOTE, AND THE SECURITY THEREFOR; AUTHORIZING THE EXECUTION AND DELIVERY OF OTHER DOCUMENTS IN CONNECTION WITH THE 2016 NOTE; PROVIDING FOR SEVERABILITY; AND PROVIDING AN EFFECTIVE DATE.

BE IT RESOLVED BY THE CITY COUNCIL OF THE CITY OF TAVARES, FLORIDA, AS FOLLOWS:

SECTION 1. AUTHORITY FOR THIS RESOLUTION. This Resolution is adopted pursuant to the provisions of Chapter 166, Florida Statutes, the Florida Constitution, and other applicable provisions of law.

SECTION 2. FINDINGS. It is hereby ascertained, determined and declared:

(A) The City of Tavares, Florida (the "City") deems it necessary, desirable and in the best interests of the City that the City finance its costs of acquiring and/or constructing a public safety complex including a fire station and police station and related improvements (the "Project"), all as more particularly described in the Loan Agreement (as defined herein).

(B) Pursuant to Section 2(b), Article VIII of the State Constitution, and Section 166.021, Florida Statutes, municipalities have the governmental, corporate and proprietary powers to enable them to conduct municipal government, perform municipal

functions, and render municipal services, and may exercise any power for municipal purposes, except when expressly prohibited by law. The issuance of the 2016 Note (hereinafter defined) and the execution and delivery of the Loan Agreement for the purposes of financing the cost of the Project is not prohibited by law.

(C) The City staff in combination with the City's Financial Advisor, Hilltop Securities, Inc. ("Hilltop"), have reviewed the proposal of Florida Community Bank, N.A. (the "Bank") regarding a loan in an amount of not to exceed $11,250,000 as provided in the 2016 Note (the "Loan") to the City, the proceeds of which will be applied to finance costs of the Project and to pay costs of issuing the 2016 Note.

(D) The Loan will be secured as provided herein and in the Loan Agreement pursuant to which the City will issue its Infrastructure Sales Surtax Revenue Note, Series 2016 (the "2016 Note") to secure the repayment of the Loan.

(E) The City is advised by Hilltop that due to the present volatility of the market for municipal debt, it is in the best interest of the City to issue the 2016 Note pursuant to the Loan Agreement by negotiated sale, allowing the City to issue the 2016 Note at the most advantageous time, rather than a specified advertised future date, thereby allowing the City to obtain the best possible price, interest rate and other terms for the 2016 Note and, accordingly, the City Council of the City hereby finds and determines that it is in the best financial interest of the City that a negotiated sale of the 2016 Note to the Bank be authorized.

SECTION 3. AUTHORIZATION OF FINANCING OF PROJECT. The City hereby authorizes the financing of the Project as more particularly described in the Loan Agreement.

SECTION 4. ACCEPTANCE OF BANK PROPOSAL. Based on a recommendation from the City's selection team, the City hereby accepts the revised proposal of the Bank dated July 8, 2016, which is attached hereto, to provide the City with the Loan.

SECTION 5. APPROVAL OF FORM OF AND AUTHORIZATION OF LOAN AGREEMENT AND 2016 NOTE AND EXECUTION OF LOAN AGREEMENT AND 2016 NOTE. The Loan and the repayment of the Loan as evidenced by the 2016 Note shall be pursuant to the terms and provisions of the Loan Agreement and the 2016 Note. The City hereby approves the Loan Agreement in substantially the form attached hereto as **Exhibit A** and the 2016 Note substantially in the form attached to the Loan Agreement and authorizes the Mayor or the Vice Mayor of the City (collectively, the "Mayor") and the City Clerk or any deputy or assistant City Clerk of the City (collectively, the "City Clerk") to execute and deliver on behalf of the City the Loan Agreement by and between the City and the Bank substantially in the form attached hereto as **Exhibit A** (the "Loan Agreement") and the 2016 Note in substantially the form attached to the Loan Agreement, with such changes, insertions and additions as they may approve, their execution thereof being conclusive evidence of such approval.

SECTION 6. PAYMENT OF DEBT SERVICE ON 2016 NOTE. Pursuant to the Loan Agreement, the 2016 Note will be secured by amounts received by the City from the levy by the Board of County Commissioners of Lake County, Florida of a one cent infrastructure

sales surtax pursuant to Section 2012.055(2) Florida Statutes, all as more particularly described in the Loan Agreement.

SECTION 7. AUTHORIZATION OF OTHER DOCUMENTS TO EFFECT TRANSACTION. To the extent that other documents, certificates, opinions, or items are needed to effect any of the transactions referenced in this Resolution, the Loan Agreement or the 2016 Note and the security therefor, the Mayor, the City Clerk, the City Administrator, the Finance Director, the City Attorney and the City's Bond Counsel are hereby authorized to execute and deliver such documents, certificates, opinions, or other items and to take such other actions as are necessary for the full, punctual, and complete performance of the covenants, agreements, provisions, and other terms as are contained herein and in the 2016 Note, the Loan Agreement and the Bank proposal.

SECTION 8. PAYING AGENT AND REGISTRAR. The City hereby accepts the duties to serve as registrar and paying agent for the 2016 Note.

SECTION 9. LIMITED OBLIGATION. The obligation of the City to repay amounts under the Loan Agreement and the 2016 Note are limited and special obligations, payable solely from the sources and in the manner set forth in the Loan Agreement and shall not be deemed a pledge of the faith and credit or taxing power of the City.

SECTION 10. EFFECT OF PARTIAL INVALIDITY. If any one or more provisions of this Resolution, the Loan Agreement or the 2016 Note shall for any reason be held to be illegal or invalid, such illegality or invalidity shall not effect any other provision of this Resolution, the Loan Agreement or the 2016 Note, but this Resolution, the Loan Agreement and the 2016 Note shall be construed and enforced as if such illegal or invalid provision had not been contained therein. The 2016 Note shall be issued and the Loan Agreement shall be executed and this Resolution is adopted with the intent that the laws of the State of Florida shall govern their construction.

SECTION 11. EFFECTIVE DATE. This Resolution shall take effect immediately upon its adoption.

PASSED, APPROVED AND ADOPTED this 3rd day of August, 2016.

CITY OF TAVARES, FLORIDA

[SEAL]

By_____
Lori Pfister
Mayor

ATTEST:

By_____
Nancy A. Barnett
City Clerk

Approved as to form:

By_____
Robert Q. Williams
City Attorney

EXHIBIT A

LOAN AGREEMENT

(See Attached)

COMPARISON INFORMATION		
[REDLINE: 38725229;3 v. 38725229;4]		07/26/2016 @ 11:55 AM

LOAN AGREEMENT

Dated August 5, 2016

By and Between

CITY OF TAVARES, FLORIDA
(the "City")

and

FLORIDA COMMUNITY BANK, N.A.
(the "Bank")

TABLE OF CONTENTS

(The Table of Contents for this Loan Agreement is for convenience of reference only and is not intended to define, limit or describe the scope or intent of any provisions of this Loan Agreement.)

Page

ARTICLE I DEFINITION OF TERMS 1
Section 1.01. Definitions 1
Section 1.02. Interpretation 3
Section 1.03. Titles and Headings 3

ARTICLE II REPRESENTATIONS AND WARRANTIES OF THE PARTIES 4
Section 2.01. Representations and Warranties of City 4
Section 2.02. Covenants of the City 5
Section 2.03. Representations and Warranties of Bank 5

ARTICLE III THE NOTE 5
Section 3.01. Purpose and Use 5
Section 3.02. The Note 5
Section 3.03. Adjustments to Note Rate 6
Section 3.04. Conditions Precedent to Issuance of Note 6
Section 3.05. Registration of Transfer; Assignment of Rights of Bank 8
Section 3.06. Ownership of the Note 8
Section 3.07. Use of Proceeds of Note Permitted Under Applicable Law 9
Section 3.08. Authentication 9

ARTICLE IV COVENANTS OF THE CITY 9
Section 4.01. Performance of Covenants 9
Section 4.02. Payment of Note 9
Section 4.03. Tax Covenant 9
Section 4.04. Compliance with Laws and Regulations 10
Section 4.05. Additional Debt 10
Section 4.06. Covenant Regarding Pledged Revenues 10
Section 4.07. Books and Records 10
Section 4.08. Insurance 11

ARTICLE V EVENTS OF DEFAULT AND REMEDIES 11
Section 5.01. Events of Default 11
Section 5.02. Exercise of Remedies 11
Section 5.03. City Notice of Events of Default and Liabilities 12
Section 5.04. Remedies Not Exclusive 12
Section 5.05. Waivers, Etc 12

ARTICLE VI MISCELLANEOUS PROVISIONS 12

Section 6.01. Covenants of City, Etc.; Successors 12
Section 6.02. Term of Agreement 13
Section 6.03. Amendments and Supplements 13
Section 6.04. Notices 13
Section 6.05. Benefits Exclusive 13
Section 6.06. Severability 13
Section 6.07. Payments Due on Saturdays, Sundays and Holidays 14
Section 6.08. Counterparts 14
Section 6.09. Applicable Law 14
Section 6.10. No Personal Liability 14
Section 6.11. Waiver of Jury Trial 14
Section 6.12. Incorporation by Reference 15

Exhibit A Form of Note Including Purchaser's Certificate A-1

COMPARISON INFORMATION		
[REDLINE: 38725229;3 v. 38725229;4]		07/26/2016 @ 11:55 AM

LOAN AGREEMENT

THIS LOAN AGREEMENT (this "Agreement"), made and entered into this 5th day of August, 2016, by and between **CITY OF TAVARES, FLORIDA** (the "City"), a municipal corporation of the State of Florida and its successors and assigns, and **FLORIDA COMMUNITY BANK, N.A.**, a national banking association, and its successors and assigns (the "Bank").

W I T N E S S E T H:

WHEREAS, capitalized terms used in these recitals and not otherwise defined shall have the meanings specified in Article I of this Agreement;

WHEREAS, the City, pursuant to the provisions of the Florida Constitution, Chapter 166, Florida Statutes Section 212.055(2) Florida Statutes, Ordinance No. 2015-22 of Lake County (the "Ordinance"), the Interlocal Agreement as defined herein and other applicable provisions of law (all of the foregoing, collectively, the "Act"), and Resolution No. ~~_____~~,2016-13, duly adopted by the City on August 3, 2016, is authorized to borrow money, and more particularly issue the Note described below for the City's public purpose; and

WHEREAS, in response to a request for proposal by the City regarding an intended borrowing to finance the acquisition and/or construction of a City owned and operated public safety complex including a fire station and police station and related improvements (the "Project"), and related costs of issuance, the Bank submitted its revised proposal, dated July 8, 2016, to the City (the "Proposal"); and

WHEREAS, the City has accepted the Proposal and the Bank is willing to purchase the Note, but only upon the terms and conditions of this Agreement;

NOW, THEREFORE, the parties hereto agree as follows:

ARTICLE I

DEFINITION OF TERMS

Section 1.01. Definitions. Capitalized terms used in this Agreement and not otherwise defined shall have the respective meanings as follows:

"Act" shall have the meaning assigned to that term in the recitals hereof.

"Agreement" shall mean this Loan Agreement and all modifications, alterations, amendments and supplements hereto made in accordance with the provisions hereof.

"Bond Counsel" shall mean, Akerman LLP, Orlando, Florida, or any other attorney at law or firm of attorneys of nationally recognized standing in matters pertaining to the federal tax exemption of interest on obligations issued by states and political subdivisions hired by the City to render an opinion on such matters with regard to the Note.

"Business Day" shall mean any day other than a Saturday, a Sunday, or a day on which the office of the Bank at which payments on the Note are due is lawfully closed.

"City" shall mean the City of Tavares, Florida, a municipal corporation.

"City Clerk" shall mean the City Clerk of the City and such other person as may be duly authorized to act on his or her behalf.

"City Administrator" shall mean the City Administrator of the City and such other person as may be duly authorized to act on his or her behalf.

"Code" shall mean the Internal Revenue Code of 1986, as amended from time to time, and the applicable rules and regulations promulgated thereunder.

"Debt Service" means principal and interest, and other debt-related costs, due in connection with the Note.

"Default Rate" shall mean the lesser of six percent per annum or the highest rate of interest allowed by applicable law.

"Determination of Taxability" shall mean, shall mean a final decree or judgment of any Federal court or a final action of the Internal Revenue Service determining that interest paid or payable on the Note is or was includable in the gross income of an Owner for Federal income tax purposes; provided, no Determination of Taxability shall be deemed to occur unless the City has been given written notice of such occurrence and, to the extent permitted by law, an opportunity to participate in and seek, at the City's own expense, a final administrative determination by the Internal Revenue Service or determination by a court of competent jurisdiction (from which no further right of appeal exists) as to the occurrence of such Determination of Taxability.

"Determination of Taxability Period" shall mean the period of time between (a) the earliest date that the Internal Revenue Service imposes federal income tax on the interest on any of the Notes and (b) the effective date of the Determination of Taxability.

"Event of Default" shall mean an Event of Default as defined in Section 5.01 of this Agreement.

"Final Maturity Date" shall mean the date on which all principal and all unpaid interest accrued on the Note shall be due and payable in full, which date shall be, if not sooner due to acceleration or prepayment, October 1, 2032.

"Fiscal Year" shall mean the 12-month period commencing October 1 of each year and ending on the succeeding September 30, or such other 12-month period as the City may designate as its "fiscal year" as permitted by law.

"Infrastructure Sales Surtax" shall mean all amounts received by the City from the levy by the Board of County Commission of Lake County of a 1.0 percent (1.0%) discretionary sales surtax pursuant to the authorization of Section 212.055(2), Florida Statutes and paid to the City

pursuant to that Interlocal Agreement effective as of June 16, 2015 by and among Lake County, the City, certain other municipalities within Lake County and the School Board of Lake County, Florida (the "Interlocal Agreement").

"Interest Payment Date" shall mean each April 1 and October 1, commencing October 1, 2016.

"Investment Securities" shall mean any investments permitted by the City's investment policy as amended from time to time.

"Loan" shall refer to an amount equal to the outstanding principal of the Note, together with unpaid interest and other amounts due thereunder which have accrued.

"Note" shall mean the City of Tavares, Florida Infrastructure Sales Surtax Revenue Note, Series 2016 issued by the City under this Agreement and the Resolution.

"Note Rate" shall mean the rate of interest to be borne by the Note which shall be a fixed rate equal to 2.95% per annum calculated on the basis of a 360-day year of 12, 30-day months, subject to adjustment as provided in this Agreement and the Note.

"Noteholder" or "Holder" or any similar term shall mean the Bank as the holder of the Note and any subsequent registered holder of the Note.

"Pledged Revenues" shall mean the Infrastructure Sales Surtax and until applied in accordance with the provisions of this Agreement, the proceeds of the Note.

"Project" shall have the meaning set forth in the "Whereas" clauses to this Agreement.

"Resolution" shall mean Resolution No. ~~_____~~,2016-13, duly adopted at a meeting of the City Council of the City on August 3, 2016 which, among other things, authorized and confirmed the borrowing of the Loan and execution and delivery of this Agreement and the issuance of the Note.

Section 1.02. Interpretation. Unless the context clearly requires otherwise, words of masculine gender shall be construed to include correlative words of the feminine and neuter genders and vice versa, and words of the singular number shall be construed to include correlative words of the plural number and vice versa. Any capitalized terms used in this Agreement not herein defined shall have the meaning ascribed to such terms in the Resolution. This Agreement and all the terms and provisions hereof shall be construed to effectuate the purpose set forth herein and to sustain the validity hereof.

Section 1.03. Titles and Headings. The titles and headings of the Articles and Sections of this Agreement, which have been inserted for convenience of reference only and are not to be considered a part hereof, shall not in any way modify or restrict any of the terms and provisions hereof, and shall not be considered or given any effect in construing this Agreement or any provision hereof or in ascertaining intent, if any question of intent should arise.

ARTICLE II

REPRESENTATIONS AND WARRANTIES OF THE PARTIES

Section 2.01. Representations and Warranties of City. The City represents and warrants to the Bank as follows:

(a) Existence. The City is a municipal corporation of the State of Florida, duly created and validly existing under the laws of the State of Florida, with full power to enter into this Agreement, to perform its obligations hereunder and to issue and deliver the Note to the Bank. The City will take all reasonable legal action within its control in order to maintain its existence as a municipal corporation of the State of Florida and shall not voluntarily dissolve. The making, execution and performance of this Agreement on the part of the City and the issuance and delivery of the Note have been duly authorized by all necessary action on the part of the City and will not violate or conflict with the Act, or any agreement, indenture or other instrument by which the City or any of its properties is bound.

(b) Validity, Etc. This Agreement, the Note and the Resolution are valid and binding obligations of the City enforceable against the City in accordance with their respective terms, except to the extent that enforceability may be subject to valid bankruptcy, insolvency, financial emergency, reorganization, moratorium or similar laws relating to or from time to time affecting the enforcement of creditors' rights and except to the extent that the availability of certain remedies may be precluded by general principles of equity.

(c) No Financial Material Adverse Change. No material adverse change in the financial condition of the City has occurred since the audited financial statements of the City for its year ended September 30, 2015.

(d) Powers of City. The City has the legal power and authority to pledge the Pledged Revenues to the repayment of the Loan as described herein.

(e) Authorizations, etc. No authorization, consent, approval, license, exemption of or registration or filing with any court or governmental department, commission, board, bureau, agency or instrumentality, domestic or foreign, has been or will be necessary for the valid execution, delivery and performance by the City of this Agreement, the Note and the related documents, except such as have been obtained, given or accomplished.

(f) Advice, etc. The City has sought and obtained financial, legal, tax, accounting and other advice (including as it relates to structure, timing, terms and similar matters) with respect to the proposed issuance of the Note from its financial, legal and other advisors (and not the Bank or any of its affiliates) to the extent that the City desired to obtain such advice. The City acknowledges that neither the Bank nor any of its affiliates shall act as a fiduciary for the City or in the capacity of broker, dealer, municipal securities underwriter or municipal advisor with respect to the proposed issuance of the Note and neither the Bank nor any of its affiliates has provided, and will not provide, financial, legal, tax, accounting or other advice to or on behalf of the City with respect to the proposed issuance of the Note.

(g) No Lien. The Pledged Revenues are not pledged or encumbered in any manner other than to the payment of Debt Service in the Note.

Section 2.02. Covenants of the City. The City covenants as follows:

The City will furnish to the Bank (i) within 210 days following the end of each Fiscal Year, a comprehensive annual financial report of the City for such Fiscal Year, and an audit report of an independent CPA, (ii) within 60 days after adoption thereof the current annual budget of the City, and (iii) such other documents as the Bank may reasonably request. Such documents may be provided to the Bank electronically. If the opinion of the independent CPA set forth in such audit report is qualified as to the financial statements of the City such shall constitute an Event of Default hereunder.

Section 2.03. Representations and Warranties of Bank. The Bank represents and warrants to the City as follows:

(a) The Bank (i) has such knowledge and experience in financial and business matters that it is capable of evaluating the merits and risks of making the Loan and investing in the Note; (ii) has received and reviewed such financial information concerning the Pledged Revenues as it has needed in order to fairly evaluate the merits and risks of making the Loan and investing in the Note; and (iii) is purchasing the Note as an investment for its own account and not with a current view toward resale to the public.

(b) Proposal Superseded. The Proposal is superseded by this Agreement.

ARTICLE III

THE NOTE

Section 3.01. Purpose and Use. On the date of this Agreement, the Bank shall make available to the City the Loan in the principal amount of Eleven Million Two Hundred Fifty Thousand Dollars and No Cents ($11,250,000). The proceeds available under the Note and this Agreement shall be used solely to finance the Project and to pay costs of issuing the Note and such proceeds (other than certain ~~cost~~costs of issuance retained by the Bank) shall be deposited in a project fund held by the Bank.

Section 3.02. The Note. The Note shall be substantially in the form set forth as **Exhibit A** to this Agreement. The general terms of the Note shall be as follows:

(a) Amount of Note. The aggregate principal amount of the Note shall be Eleven Million Two Hundred Fifty Thousand Dollars and No Cents ($11,250,000).

(b) Interest. The Note shall bear interest at the Note Rate payable on each Interest Payment Date. Interest on the Note shall be computed on the basis of a 360 day year of 12, 30 day months.

(c) Prepayments. The Note shall be subject to prepayment at the option of the City, in whole or in part on any date, from any legally available monies, at a prepayment price of 100% of the principal amount to be prepaid, plus accrued interest to the prepayment date. Any prepayment shall be made on the date as shall be specified by the City in a written notice delivered to the Noteholder not less than ten (10) days prior to the specified prepayment date. Any prepayment shall be applied first to accrued interest, then to other amounts owed the Bank, and finally to principal. Prepayments or principal shall be applied in inverse order of maturity, unless otherwise designated by the City.

Principal on the Note is payable on each October 1 commencing October 1, 2018 as set forth in the Note.

Section 3.03. Adjustments to Note Rate. The Note Rate shall be subject to adjustment as hereinafter described and as provided in the Note.

In the event of a Determination of Taxability, the Note Rate shall be adjusted to a rate per annum equal to the Note Rate immediately prior to effective date of the Determination of Taxability divided by one minus the Holder's then effective federal tax rate (the "Taxable Rate") effective retroactively to the date on which interest on the Note first loses its "tax-exempt" status. Immediately upon a Determination of Taxability, the City agrees to pay to the Noteholder subject to such Determination of Taxability the Additional Amount (as defined herein). "Additional Amount" means (i) the difference between (a) the amount of interest paid on the Note during the Determination of Taxability Period and (b) the aggregate amount of interest that would have been on the Note during the Determination of Taxability had the Note borne interest at the Taxable Rate plus (ii) any penalties and interest paid or payable by the Noteholder to the Internal Revenue Service by reason of such Determination of Taxability.

The Noteholder shall promptly notify the City in writing of any adjustment pursuant hereto. Such adjustment shall become effective as of the effective date of the event causing such adjustment. The Noteholder shall certify to the City in writing the Additional Amount, if any, due to the Noteholder as a result of an adjustment pursuant hereto. Notwithstanding any provision hereto the contrary, in no event shall the interest rate on the Note exceed the maximum rate permitted by law.

Section 3.04. Conditions Precedent to Issuance of Note. Prior to or simultaneously with the delivery of the Note, there shall be filed with the Bank the following, each in form and substance satisfactory to the Bank:

(a) an opinion of counsel to the City substantially to the effect that (i) the Resolution has been duly adopted and the Ordinance has been duly enacted by Lake County Florida, (ii) the Interlocal Agreement, this Agreement and the Note has been duly authorized, executed and delivered by the City and each constitutes a valid, binding and enforceable agreement of the City in accordance with their respective terms, except to the extent that the enforceability of the rights and remedies set forth herein may be limited by bankruptcy, insolvency, financial emergency or other laws affecting creditors' rights generally or by usual equity principles; (iii) the City's execution, delivery and performance of this Agreement and the

Interlocal Agreement and execution, issuance and delivery of the Note are not subject to any authorization, consent, waiver, approval or review of any governmental body, public officer or regulatory authority not heretofore obtained or effected; (iv) the execution, issuance and delivery of the Note has been duly and validly authorized by the City, and the Note constitutes a valid and binding special obligation of the City enforceable in accordance with its terms; (v) the City (A) is a municipal corporation duly organized and validly existing under the laws of the State of Florida, and (B) has power and authority to adopt the Resolution, to execute and deliver this Agreement and the Interlocal Agreement, to execute and deliver the Note, and to consummate the transactions contemplated by such instruments; (vi) the execution, delivery and performance of the Note, the Interlocal Agreement and this Agreement, and compliance with the terms thereof and hereof, under the circumstances contemplated hereby, do not and will not in any material respect conflict with, or constitute on the part of the City a breach or default under, any indenture, mortgage, deed of trust, agreement or other instrument to which the City or to which its properties are subject or conflict with, violate or result in a breach of any existing law, administrative rule or regulation, judgment, court order or consent decree to which the City or its properties are subject; (vii) there is no claim, action, suit, proceeding, inquiry, investigation, litigation or other proceeding, at law or in equity, pending or, to the best of such counsel's knowledge, threatened in any court or other tribunal, state or federal (A) restraining or enjoining, or seeking to restrain or enjoin, the issuance, sale, execution or delivery of the Note, (B) in any way questioning or affecting the validity or enforceability of any provision of this Agreement, the Interlocal Agreement, the Note, the referendum approving the levy of the Infrastructure Sales Surtax or the Resolution, (C) in any way questioning or affecting the validity of any of the proceedings or authority for the authorization, sale, execution or delivery of the Note, or of any provision made or authorized for the payment thereof, or (D) questioning or affecting the organization or existence of the City or the right of any of its officers to their respective offices; (viii) the City has the legal power to acquire and construct the Project and to pay associated costs of issuance, to grant a lien on the Pledged Revenues as described herein and in the Note and the Resolution; (ix) all conditions contained in the ordinances and resolutions of the City precedent to the issuance of the Note have been complied with;

(b) an opinion of Bond Counsel (who may rely on opinion of counsel to the City), substantially to such effect that such counsel is of the opinion that: (i) this Agreement constitutes a valid and binding obligation of the City enforceable upon the City in accordance with its terms; (ii) the Note is a valid and binding special obligation of the City enforceable in accordance with its terms, payable solely from the sources provided for therein and in this Agreement; (iii) assuming compliance by the City with certain covenants relating to requirements contained in the Code interest on the Note is excluded from gross income for purposes of federal income taxation; (iv) the Note is exempt from registration under the Securities Act of 1993, as amended, and the Resolution and this Agreement are exempt from qualification under the Trust Indenture Act of 1939, as amended;

(c) a copy of a completed and executed Form 8038-G to be filed with the Internal Revenue Service by the City;

(d) a certified copy of the Resolution;

(e) the original executed Note and Agreement; and

(f) such other documents as the Bank reasonably may request.

When the documents and items mentioned in clauses (a) through (f), inclusive, of this Section shall have been filed with the Bank, and when the Note shall have been executed as required by this Agreement, the City shall deliver the Note to or upon the order of the Bank upon receipt of the purchase price therefor. Payment of the purchase price of the Note by the Bank shall be conclusive evidence that all conditions pursuant to the delivery of the Note have been met.

Section 3.05. Registration of Transfer; Assignment of Rights of Bank. The City shall keep at the office of the City Clerk in the City's records the registration of the Note and the registration of transfers of the Note as provided in this Agreement. The transfer of the Note may be registered only upon the books kept for the registration of the Note and registration of transfer thereof upon surrender thereof to the City together with an assignment duly executed by the Holder or its attorney or legal representative in the form of the assignment set forth on the form of the Note attached as Exhibit A to this Agreement; provided, however, that the Note may be transferred only in whole and not in part. In the case of any such registration of transfer, the City shall execute and deliver in exchange for the Note a new Note registered in the name of the transferee. In all cases in which the Note shall be transferred hereunder, the City shall execute and deliver at the earliest practicable time a new Note in accordance with the provisions of this Agreement. The City may make a charge for every such registration of transfer of a Note sufficient to reimburse it for any tax or other governmental charges required to be paid with respect to such registration of transfer (other than a tax or charge imposed by the City), but no other charge shall be made for registering the transfer hereinabove granted. The Note shall be issued in fully registered form and shall be payable in any lawful coin or currency of the United States.

The registration of transfer of the Note on the registration books of the City shall be deemed to effect a transfer of the rights and obligations of the Bank under this Agreement to the transferee. Thereafter, such transferee shall be deemed to be the Bank under this Agreement and shall be bound by all provisions of this Agreement that are binding upon the Bank. The City and the transferor shall execute and record such instruments and take such other actions as the City and such transferee may reasonably request in order to confirm that such transferee has succeeded to the capacity of Bank under this Agreement and the Note.

The Holder of the Note is hereby granted power to transfer absolute title thereof by assignment thereof to a bona fide purchaser for value (present or antecedent) without notice of prior defenses or equities or claims of ownership enforceable against such Holder's assignor or any person in the chain of title and before the maturity of the Note; provided, however, that the Note may be transferred only in whole and not in part and provided further, that no transfer shall be permitted absent the City's (and the Holder's) receipt of a certificate in form and substance similar to the one included as part of **Exhibit A** hereto from such proposed transferee. Every prior Holder of the Note shall be deemed to have waived and renounced all of such Holder's equities or rights therein in favor of every such bona fide purchaser, and every such bona fide purchaser shall acquire absolute title thereto and to all rights represented thereby.

In the event any Note is mutilated, lost, stolen, or destroyed, the City shall execute a new Note of like date and denomination as that mutilated, lost, stolen or destroyed, provided that, in the

case of any mutilated Note, such mutilated Note shall first be surrendered to the City, and in the case of any lost, stolen, or destroyed Note, there first shall be furnished to the City evidence of such loss, theft or destruction together with an indemnity satisfactory to it.

Section 3.06. Ownership of the Note. The person in whose name the Note is registered shall be deemed and regarded as the absolute owner thereof for all purposes, and payment of or on account of the Note shall be made only to the Holder thereof or such Holder's legal representative. All such payments shall be valid and effectual to satisfy and discharge the liability upon the Note, and interest thereon, to the extent of the sum or sums so paid.

Section 3.07. Use of Proceeds of Note Permitted Under Applicable Law. The City represents, warrants and covenants that the proceeds of the Note will be used solely for costs of the Project and costs of issuance of the Note, and that such use is permitted by applicable law.

Section 3.08. Authentication. Until the Note shall have endorsed thereon a certificate of authentication substantially in the form set forth in Exhibit A, duly executed by the manual signature of the registrar as authenticating agent, it shall not be entitled to any benefit or security under this Agreement. The Note shall not be valid or obligatory for any purpose unless and until such certificate of authentication shall have been duly executed by the registrar, and such certificate of the registrar upon the Note shall be conclusive evidence that such Note has been duly authenticated and delivered under this Agreement.

ARTICLE IV

COVENANTS OF THE CITY

Section 4.01. Performance of Covenants. The City covenants that it will, subject to the provisions of this Agreement, perform faithfully at all times its covenants, undertakings and agreements contained in this Agreement and the Note or in any proceedings of the City relating to the Loan.

Section 4.02. Payment of Note.

(a) The City does hereby irrevocably pledge the Pledged Revenues as security for the repayment of the Note and agrees to make all payments on the Note when due from the Pledged Revenues.

(b) The Note will be a special obligation of the City secured solely by the Pledged Revenues and is payable from the Pledged Revenues as provided in this Agreement. The Note will not constitute a general debt, liability or obligation of the City or the State of Florida or any political subdivision thereof within the meaning of any constitutional or statutory limitation. Neither the faith and credit nor the taxing power of the City or of the State of Florida or any political subdivision thereof is pledged to the payment of the principal of or interest on the Note and the Noteholder shall never have the right to compel any exercise of any ad valorem taxing power of the City or of the State of Florida or any political subdivision thereof, directly or indirectly to enforce such payment. The Note shall not constitute a lien upon any property of the City except upon the Pledged Revenues.

Section 4.03. Tax Covenant. The City covenants to the Holders of the Note that the City will not make any use of the proceeds of the Note at any time during the term of the Note which, if such use had been reasonably expected on the date the Note was issued, would have caused the Note to be an "arbitrage bond" within the meaning of the Code. The City further covenants comply with the requirements of the Code and any valid and applicable rules and regulations promulgated thereunder necessary to insure the exclusion of interest on the Note from the gross income of the Holders thereof for purposes of federal income taxation.

Section 4.04. Compliance with Laws and Regulations. The City shall maintain compliance with all federal, state and local laws and regulations regarding the acquisition, construction and maintenance of the Project.

Section 4.05. Additional Debt. The City will not issue any other obligations payable from the Pledged Revenues or voluntarily create or cause to be created any debt, lien, pledge, assignment, encumbrance or other charge having priority to the lien thereon in favor of the Note and the interest thereon.

The City may, however, issue debt payable from the Pledged Revenues on parity with the Note ("Additional Debt") for any one or more of the following purposes: financing the cost of an additional project in accordance with the provisions of the Act, or the completion thereof or of the Project, or refunding of any or all of the Note or any Additional Debt.

No such Additional Debt shall be issued by the City unless the following conditions are complied with:

(a) There shall have been obtained and filed with the City and the Holders a certificate of the City Finance Director or other appropriate finance officer of the City stating that for any consecutive twelve month period during the most recent eighteen months, the amount of the Infrastructure Sales Tax received by the City is at least one hundred and twenty-five percent (125%) of the maximum annual debt service on the Note, plus all Additional Debt outstanding and the proposed Additional Debt and that no default shall exist under this Agreement or the Note. For the purposes of calculating maximum annual debt service with respect to any Additional Debt bearing or to bear a variable interest rate the interest rate shall be assumed to be the higher of 4.00% per annum or the actual interest rate borne during the month immediately preceding the date of calculation. The foregoing notwithstanding any variable rate debt with respect to which the City has entered into an interest rate swap or interest rate cap for a notional amount equal to the principal amount of such variable rate debt shall be treated for such purposes as bearing interest at a fixed rate equal to the fixed rate payable by the City under the interest rate swap, or the capped rate provided by the interest rate cap.

(b) In the event any Additional Debt is issued for the purpose of refunding the Note or any outstanding Additional Debt, the conditions of Section 4.05 (a) hereof shall not apply, provided that the issuance of such Additional Debt for refunding purpose, shall not result in an increase in the aggregate amount of principal of and interest on the debt so secured becoming due in the current Fiscal Year and any subsequent Fiscal Years. The conditions of Section 4.05 (a)

hereof shall apply to Additional Debt issued for refunding purposes which cannot meet the conditions of this paragraph.

Section 4.06. Covenant Regarding Pledged Revenues. As long as the Note is outstanding the City covenants to (i) take all steps, actions, and proceedings necessary for the enforcement and collection of the Pledged Revenues, (ii) not to repeal the actions of the City authorizing the receipt of the Pledged Revenues, (iii) not to amend or modify its proceedings in any manner which would impair or adversely affect the power of the City to receive any of the Pledged Revenues or adversely affect in any manner the pledge of the Pledged Revenues or the rights of the Holders, and (iv) comply with the Interlocal Agreement.

Section 4.07. Books and Records. The City shall keep complete and correct entries regarding its finances and agrees that any and all such records of the City shall be open to inspection by the Noteholder, or its representative's at all reasonable times at the office of the City.

Section 4.08. Insurance. The City shall maintain such liability, casualty, and other insurance as is reasonable and prudent for a similarly situated city and shall upon request of the Noteholder, provide evidence of such coverage to the Noteholder.

Section 4.09. Fees. The City agrees to pay the Bank's commitment fee equal to 10 basis points, and to be responsible for payment of the fees of counsel to the Bank in the amount of $5,000.

ARTICLE V

EVENTS OF DEFAULT AND REMEDIES

Section 5.01. Events of Default. Each of the following is hereby declared an "Event of Default:"

(a) payment of the principal and/or interest of the Note shall not be made when the same shall become due and payable; or

(b) the City shall default in the due and punctual performance of any other of the covenants, conditions, agreements and provisions contained in the Note or in this Agreement and such default shall continue for thirty (30) days after written notice shall have been given to the City by the Noteholder or the Noteholder is otherwise notified of such default or should have been so notified whichever is earlier specifying such default and requiring the same to be remedied; provided, however, that if, in the reasonable judgment of the Noteholder, the City shall proceed to take such curative action which, if begun and prosecuted with due diligence, cannot be completed within a period of thirty (30) days, then such period shall be increased to such extent as shall be necessary, in the reasonable judgment of the Holder, to enable the City to diligently complete such curative action; or

(c) any representation or warranty of the City contained in this Agreement or in any certificate or other closing document executed and delivered by the City in connection with

the closing of the Loan shall prove to have been untrue in any material respect when executed and delivered, thereby adversely impairing the security for the Note; or

(d) any act of bankruptcy or the rearrangement, adjustment or readjustment of the obligations of the City under the provisions of any bankruptcy or moratorium laws or similar laws relating to or affecting creditor's rights; or

(e) Failure of the City to promptly remove any execution, garnishment or attachment of such consequence as will materially impair its ability to carry out its obligations under this Agreement or the Note.

Section 5.02. Exercise of Remedies. Upon the occurrence and during the continuance of an Event of Default, the Note shall bear interest at the Default Rate and all payments made on the Note during any such period shall be applied first to interest and then to principal. Upon the occurrence and during the continuance of an Event of Default, the Noteholder may proceed to protect and enforce its rights under the laws of the State of Florida or under this Agreement by such suits, actions or special proceedings in equity or at law, or by proceedings in the office of any board or officer having jurisdiction, either for the specific performance of any covenant or agreement contained herein or in aid or execution of any power herein granted or for the enforcement of any proper legal or equitable remedy, as the Noteholder shall deem most effective to protect and enforce such rights. Without limiting the generality of the foregoing, the Noteholder shall have the right to bring a mandamus action to require the City to perform its obligations under this Agreement, provided, the Holder shall never have the right to compel the exercise of the ad valorem taxing power of the City, or taxation in any form of any property therein to pay the Note or the interest thereon. Notwithstanding any other provisions of the Agreement payments due on the Note may not be accelerated unless any other debt of the City secured by or payable from the Infrastructure Sales Surtax is accelerated.

Section 5.03. City Notice of Events of Default and Liabilities. The City shall within ten days after it acquires knowledge thereof, notify the Noteholder in wiring upon the happening, occurrence, or existence of any Event of Default, and any event or condition which with the passing of time or giving of notice, or both, would constitute an Event of Default, and shall provide the Noteholder with such written notice which notice shall include a detailed statement by a responsible officer of the City of all relevant facts and the action being taken by the City with respect thereto. The City shall promptly inform the Noteholder in writing of any actual or potential contingent liabilities or pending or threatened litigation of any amount that could reasonably be expected to have a material and adverse effect upon the financial condition of the City or upon the ability of the City to perform its obligation under this Agreement.

Section 5.04. Remedies Not Exclusive. No remedy herein conferred upon or reserved to a Noteholder is intended to be exclusive of any other remedy or remedies herein provided, and each and every such remedy shall be cumulative and shall be in addition to every other remedy given hereunder.

Section 5.05. Waivers, Etc. No delay or omission of a Noteholder to exercise any right or power accruing upon any default shall impair any such right or power or shall be construed to be

a waiver of any such default or any acquiescence therein; and every power and remedy given by this Agreement to a Noteholder may be exercised from time to time and as often as may be deemed expedient.

A Noteholder may waive any default which in its opinion shall have been remedied before the entry of final judgment or decree in any suit, action or proceeding instituted by it under the provisions of this Agreement or before the completion of the enforcement of any other remedy under this Agreement, but no such waiver shall be effective unless in writing and no such waiver shall extend to or affect any other existing or any subsequent default or defaults or impair any rights or remedies consequent thereon.

ARTICLE VI

MISCELLANEOUS PROVISIONS

Section 6.01. Covenants of City, Etc.; Successors. All of the covenants, stipulations, obligations and agreements contained in this Agreement shall be deemed to be covenants, stipulations, obligations and agreements of the City to the full extent authorized or permitted by law, and all such covenants, stipulations, obligations and agreements shall be binding upon the successor or successors thereof from time to time, and upon any officer, board, commission, authority, agency or instrumentality to whom or to which any power or duty affecting such covenants, stipulations, obligations and agreements shall be transferred by or in accordance with law.

Section 6.02. Term of Agreement. This Agreement shall be in full force and effect from the date hereof until the Note and all other sums payable to the Holder hereunder have been paid in full.

Section 6.03. Amendments and Supplements. This Agreement may be amended or supplemented from time to time only by a writing duly executed by each of the City and the Holder.

Section 6.04. Notices. Any notice, demand, direction, request or other instrument authorized or required by this Agreement to be given to or filed with the City or the Bank, shall be deemed to have been sufficiently given or filed for all purposes of this Agreement if and when sent by certified mail, return receipt requested:

(a) As to the City:

City of Tavares, Florida
P.O. Box 1068
Tavares, FL 34731
Attention: City Administrator

(b) As to the Bank:

Florida Community Bank, N.A.
2325 Vanderbilt Beach Road
Naples, FL 34109
Attention: LeeAnn Kirwin-Klimek

or at such other address as shall be furnished in writing by any such party to the other, and shall be deemed to have been given as of the date so delivered or deposited in the United States mail.

Either party may, by notice sent to the other, designate a different or additional address to which notices under this Agreement are to be sent.

Section 6.05. Benefits Exclusive. Except as herein otherwise provided, nothing in this Agreement, expressed or implied, is intended or shall be construed to confer upon any person, firm or corporation, other than the City and the Noteholder, any right, remedy or claim, legal or equitable, under or by reason of this Agreement or any provision hereof, this Agreement and all its provisions being intended to be and being for the sole and exclusive benefit of the City and the Noteholder.

Section 6.06. Severability. In case any one or more of the provisions of this Agreement, any amendment or supplement hereto or of the Note shall for any reason be held to be illegal or invalid, such illegality or invalidity shall not affect any other provision of this Agreement, any amendment or supplement hereto or the Note, but this Agreement, any amendment or supplement hereto and the Note shall be construed and enforced at the time as if such illegal or invalid provisions had not been contained therein, nor shall such illegality or invalidity or any application thereof affect any legal and valid application thereof from time to time. In case any covenant, stipulation, obligation or agreement contained in the Note or in this Agreement shall for any reason be held to be in violation of law, then such covenant, stipulation, obligation, or agreement shall be deemed to be the covenant, stipulation, obligation or agreement of the City to the full extent from time to time permitted by law.

Section 6.07. Payments Due on Saturdays, Sundays and Holidays. In any case where the date of maturity of interest on or principal of the Note or the date fixed for prepayment of the Note shall be other than a Business Day, then payment of such interest or principal shall be made on the next succeeding Business Day with the same force and effect as if paid on the date of maturity or the date fixed for prepayment, and no interest on any such principal amount shall accrue for the period after such date of maturity or such date fixed for prepayment.

Section 6.08. Counterparts. This Agreement may be executed in any number of counterparts, each of which when so executed and delivered, shall be an original; but such counterparts shall together constitute but one and the same Agreement, and, in making proof of this Agreement, it shall not be necessary to produce or account for more than one such counterpart.

Section 6.09. Applicable Law. This Agreement shall be governed exclusively by and construed in accordance with the applicable laws of the State of Florida.

Section 6.10. No Personal Liability. Notwithstanding anything to the contrary contained herein or in the Note, or in any other instrument or document executed by or on behalf of the City in connection herewith, no stipulation, covenant, agreement or obligation of any present or future member of the City Commission, officer, employee or agent of the City, officer, employee or agent of a successor to the City, in any such person's individual capacity, and no such person, in his or her individual capacity, shall be liable personally for any breach or non-observance of or for any failure to perform, fulfill or comply with any such stipulations, covenants, agreements or obligations, nor shall any recourse be had for the payment of the principal of or interest on the Note or for any claim based thereon or on any such stipulation, covenant, agreement or obligation, against any such person, in his or her individual capacity, either directly or through the City or any successor to the City, under any rule or law or equity, statute or constitution or by the enforcement of any assessment or penalty or otherwise and all such liability of any such person, in his or her individual capacity, is hereby expressly waived and released.

Section 6.11. Waiver of Jury Trial. THE BANK AND THE CITY HEREBY KNOWINGLY, VOLUNTARILY AND INTENTIONALLY WAIVE THE RIGHT EITHER MAY HAVE TO A TRIAL BY JURY IN RESPECT TO ANY LITIGATION BASED HEREON, OR ARISING OUT OF, UNDER OR IN CONNECTION WITH THE RESOLUTION, THIS AGREEMENT, THE NOTE OR ANY OTHER AGREEMENT CONTEMPLATED TO BE EXECUTED IN CONJUNCTION HEREWITH, OR ANY COURSE OF CONDUCT, COURSE OF DEALING, STATEMENTS (WHETHER VERBAL OR WRITTEN), OR ACTIONS OF EITHER PARTY.

Section 6.12. Incorporation by Reference. All of the terms and obligations of the Resolution and the Exhibit hereto are hereby incorporated herein by reference as if all of the foregoing were fully set forth in this Agreement. All recitals appearing at the beginning of this Agreement are hereby incorporated herein by reference.

[*SIGNATURES ON FOLLOWING PAGE*]

[Signature Page for LOAN AGREEMENT
dated August 5, 2016 between
the City of Tavares, Florida and Florida Community Bank, N.A.]

IN WITNESS WHEREOF, the parties hereto have caused this Agreement to be duly executed as of the date first set forth herein.

CITY OF TAVARES, FLORIDA

[SEAL]

By:_____
Mayor

ATTEST:

_____
City Clerk

FLORIDA COMMUNITY BANK, N.A.

By:_____
Title: Vice President

EXHIBIT A

FORM OF NOTE

PRIOR TO BECOMING A HOLDER, A PROPOSED PURCHASER SHALL EXECUTE A PURCHASER'S CERTIFICATE IN THE FORM ATTACHED HERETO CERTIFYING, AMONG OTHER THINGS, THAT SUCH HOLDER IS AN "ACCREDITED INVESTOR" AS SUCH TERM IS DEFINED IN THE SECURITIES ACT OF 1933, AS AMENDED, AND REGULATION D THEREUNDER.

CITY OF TAVARES, FLORIDA
INFRASTRUCTURE SALES SURTAX REVENUE NOTE,
SERIES 2016

Principal Sum	Maturity Date	Note Rate	Date of Issuance
$11,250,000	October 1, 2032	2.95%	August 5, 2016

The CITY OF TAVARES, FLORIDA (the "City"), for value received, hereby promises to pay, solely from the sources described in the within mentioned Agreement, to the order of FLORIDA COMMUNITY BANK, N.A., a national banking association, or its assigns (the "Holder"), at 2325 Vanderbilt Beach Road, Naples, Florida 34109, or at such other place as the Holder may from time to time designate in writing, the Principal Sum stated above on the Maturity Date stated above, except to the extent principal has been paid prior to the Maturity Date by redemption or otherwise, together with any accrued and unpaid interest, and to pay interest on the outstanding principal amount hereof from the most recent date to which interest has been paid or provided for, or if no interest has been paid, from the Dated Date shown above on April 1 and October 1 (each, an "Interest Payment Date"), commencing on October 1, 2016, until payment of said principal sum has been made or provided for, at the Note Rate shown above, subject to adjustment as described below, calculated on the basis of a 360-day year of 12, 30-day months. Payments due hereunder shall be payable in any coin or currency of the United States of America which, at the time of payment, is legal tender for the payment of public and private debts, which payments shall be made to the Holder hereof by check mailed to the Holder at the address designated in writing by the Holder for purposes of payment or by bank wire or bank transfer as the Holder may specify in writing to the City or otherwise as the City and the Holder may agree.

The Note Rate shall be adjusted in accordance with Sections 3.03 and 5.02 of that certain Loan Agreement by and between Florida Community Bank, N.A. and the City, dated as of August 5, 2016 (the "Agreement"). Such adjustments may be retroactive.

All capitalized terms not otherwise defined herein shall have the meanings ascribed to such terms in the Agreement.

This Note may be prepaid by the City in whole or in part on any date as provided in the Agreement from any legally available monies at a prepayment price of 100% of the principal amount to be prepaid, plus accrued interest to the prepayment date. Prepayment shall be made on such date as shall be specified by the City in a written notice delivered to the Holder not less than ten (10) days prior to the specified prepayment date. Any prepayments shall be applied as provided in Section 3.02(c) of the Agreement.

Notice having been given as aforesaid, the principal amount shall become due and payable on the prepayment date stated in such notice, together with interest accrued and unpaid to the prepayment date on the principal amount. If, on the prepayment date, funds for the payment of the principal amount, together with interest to the prepayment date on such principal amount shall have been given to the Holder, as above provided, then from and after the prepayment date interest on such prepaid principal amount of this Note shall cease to accrue.

This Note is subject to mandatory redemption on October 1 of each year in the amounts all as set forth or Schedule I hereto.

This Note is authorized to be issued in the outstanding aggregate principal amount equal to the Principal Sum under the authority of and in full compliance with the Constitution and statutes of the State of Florida, including, particularly, Chapter 166, Florida Statutes, Section 212.055(2), Florida Statutes, Ordinance No. 2015-22 of Lake County, the Interlocal Agreement and other applicable provisions of law and the City's Resolution No. ~~_____~~2016-13 duly adopted on August 3, 2016 (the "Resolution"), and is subject to all terms and conditions of the Agreement, the Ordinance and the Resolution.

Notwithstanding any provision in this Note to the contrary, in no event shall the interest contracted for, charged or received in connection with this Note (including any other costs or considerations that constitute interest under the laws of the State of Florida which are contracted for, charged or received) exceed the maximum rate of interest allowed under the State of Florida as presently in effect and to the extent an increase is allowable by such laws, but in no event shall any amount ever be paid or payable by the City greater than the amount contracted for herein. In the event the maturity of this Note is prepaid in accordance with the provisions hereof or the Agreement, then such amounts that constitute payments of interest, together with any costs or considerations which constitute interest under the laws of the State of Florida, may never exceed an amount which would result in payment of interest at a rate in excess of that permitted by Section 215.84(3), Florida Statutes, as presently in effect and to the extent an increase is allowable by such laws; and excess interest, if any, shall be cancelled automatically as of the date of such acceleration or prepayment, or, if theretofore paid, shall be credited on the principal amount of this Note unpaid, but such crediting shall not cure or waive any default under the Agreement or the Resolution. This Note is a special obligation of the City secured solely by the Pledged Revenues, all in the manner and to extent described in the Agreement.

THIS NOTE, WHEN DELIVERED BY THE CITY PURSUANT TO THE TERMS OF THE AGREEMENT AND THE RESOLUTION, SHALL NOT BE OR CONSTITUTE AN INDEBTEDNESS OF THE CITY OR THE STATE OF FLORIDA, WITHIN THE MEANING OF ANY CONSTITUTIONAL, STATUTORY OR CHARTER LIMITATIONS OF

INDEBTEDNESS, BUT SHALL BE PAYABLE FROM AND SECURED SOLELY BY THE PLEDGED REVENUES, AS PROVIDED IN THE AGREEMENT AND THE RESOLUTION. THE HOLDER SHALL NEVER HAVE THE RIGHT TO COMPEL THE EXERCISE OF THE

AD VALOREM TAXING POWER OF THE CITY, OR TAXATION IN ANY FORM OF ANY PROPERTY THEREIN TO PAY THIS NOTE OR THE INTEREST THEREON.

The Holder shall have only such remedies upon the occurrence of an Event of Default as described in the Agreement.

The City hereby waives presentment, demand, protest and notice of dishonor. This Note is governed and controlled by the Agreement and reference is hereby made thereto regarding interest rate adjustments, acceleration, and other matters.

[*REMAINDER OF PAGE INTENTIONALLY LEFT BLANK*]

IN WITNESS WHEREOF, the City has caused this Note to be signed by its Mayor, either manually or with facsimile signature, and the seal of the City to be affixed hereto or imprinted or reproduced hereon, and attested by the City Clerk of the City, either manually or with facsimile signature, and this Note to be dated the Date of Issuance set forth above.

CITY OF TAVARES, FLORIDA

[SEAL]

By: _____
Mayor

ATTEST:

By: _____
City Clerk

COMPARISON INFORMATION		
[REDLINE: 38725229;3 v. 38725229;4]		07/26/2016 @ 11:55 AM

FORM OF CERTIFICATE OF AUTHENTICATION

Date of Authentication:

This Note is being delivered pursuant to the within mentioned Agreement.

CITY OF TAVARES, FLORIDA
as Registrar

By: _____
City Clerk

COMPARISON INFORMATION		
[REDLINE: 38725229;3 v. 38725229;4]		07/26/2016 @ 11:55 AM

ASSIGNMENT

FOR VALUE RECEIVED the undersigned sells, assigns and transfers unto _____ (please print or typewrite name, address and tax identification number of assignee) _____ the within Note and all rights thereunder, and hereby irrevocably constitutes and appoints _____ Attorney to transfer the within Note on the books kept for registration thereof, with full power of substitution in the premises.

Name of Noteholder:_____

By:_____

SCHEDULE I

~~DATE~~YEAR	PRINCIPAL
2018	$290,000
2019	644,000
2020	663,000
2021	682,000
2022	702,000
2023	723,000
2024	745,000
2025	766,000
2026	789,000
2027	812,000
2028	836,000
2029	861,000
2030	886,000
2031	912,000
2032	939,000

PURCHASER'S CERTIFICATE

City of Tavares, Florida (the "City")

Ladies and Gentlemen:

The undersigned, as a purchaser of the City of Tavares, Florida Infrastructure Sales Surtax Revenue Note, Series 2016 (the "Note") dated August 5, 2016, consisting of one typewritten Note, hereby certifies that we have been provided (a) a copy of City of Tavares Resolution No. _____, adopted by the City on August 3, 2016, authorizing the issuance of the Note (the "Resolution"), (b) the Loan Agreement dated as of August 5, 2016, between the City and us [as assignee of Florida Community Bank, N.A.] (the "Agreement") and (c) such financial and general information respecting the Pledged Revenues (as such term is defined in the Agreement) and the City, and the Note described above as we deem necessary to enable us to make an informed investment judgment with respect to the purchase of the Note.

We hereby make the following representations, which representations may be relied upon by the City:

A. We are aware:

(i) that investment in the Note involves various risks;

(ii) that the Note is not a general obligation of the City; and

(iii) that the principal, premium, if any, and interest on the Note is payable from and secured solely by the Pledged Revenues as specified in the Resolution and the Agreement.

B. We understand that no official statement, offering memorandum or other form of offering document has been prepared or is being used in connection with the offering or sale of the Note (collectively, "Disclosure Documents"), but we have been afforded access to all information we have requested in making our decision to purchase the Note and have had sufficient opportunity to discuss the business of the City with its officers, employees and others. We have not requested any Disclosure Documents in connection with our purchase of the Note. We do not require any further information or data incident to our purchase of the Note.

C. In purchasing the Note, we have made our own inquiry and analysis with respect to the Note and the security therefor, and other material matters affecting the security and payment of the Note. We are aware that revenue obligations such as the Note involve certain economic variables and risks that could affect the security of the Note.

D. We have knowledge and experience in financial and business matters and are capable of evaluating the merits and risks of our investment in the Note and have determined that we can bear the economic risk of our investment in the Note.

E. We acknowledge the understanding that the Note is not being registered under the Securities Act of 1933, as amended (the "1933 Act") or Chapter 517, Florida Statutes, and that the Resolution and Agreement are not being qualified under the Trust Indenture Act of 1939, as amended, and that the City shall have no obligation to effect any such registration or qualification.

F. We are purchasing the Note with our own capital for our own account. We do not currently intend to syndicate the Note. Although we retain the right to transfer the Note in the future, we understand that the Note may not be readily transferable and is subject to the transfer restrictions set forth in the Agreement.

G. We have received all documents requested by us incident to our purchase of the Note.

H. We acknowledge that we are an "accredited investor" within the meaning of Chapter 517, Florida Statutes and Regulation D of the 1933 Act.

I. We have not asked that the Note bear a CUSIP and we do not intend to seek a CUSIP for the Note.

J. There will be no credit rating obtained for the Note and we have not asked for or sought such a rating.

Signed as of the ____ day of _____, _____.

[ ]

By: _____
Authorized Officer

COMPARISON INFORMATION		
[REDLINE: 38725229;3 v. 38725229;4]		07/26/2016 @ 11:55 AM

COMPARISON INFORMATION		
[REDLINE: 38725229;3 v. 38725229;4]		07/26/2016 @ 11:55 AM

Document comparison by Workshare Compare on Tuesday, July 26, 2016 11:53:36 AM

Input:	
Document 1 ID	interwovenSite://PDC-DMS/Active/38725229/3
Description	#38725229v3<Active> - City of Tavares, FL 2016- Loan Agreement
Document 2 ID	interwovenSite://PDC-DMS/Active/38725229/4
Description	#38725229v4<Active> - City of Tavares, FL 2016- Loan Agreement
Rendering set	Standard

Legend:	
Insertion	
~~Deletion~~	
~~Moved from~~	
Moved to	
Style change	
Format change	
~~Moved deletion~~	
Inserted cell	
Deleted cell	
Moved cell	
Split/Merged cell	
Padding cell	

Statistics:	
	Count
Insertions	53
Deletions	19
Moved from	0
Moved to	0
Style change	0
Format changed	0
Total changes	72

Akerman

Akerman LLP
420 South Orange Avenue
Suite 1200
Orlando, Florida 32801
Tel: 407.423.4000
Fax: 407.843.6610

August 5, 2016

City Council
City of Tavares
Tavares, Florida

Florida Community Bank, N.A.
2325 Vanderbilt Beach Road
Naples, FL 34109

$11,250,000
CITY OF TAVARES, FLORIDA
INFRASTRUCTURE SALES SURTAX REVENUE NOTE, SERIES 2016

Dear Ladies and Gentlemen:

We have acted as Bond Counsel in connection with the issuance by the City of Tavares, Florida (the "Issuer") of its Infrastructure Sales Surtax Revenue Note, Series 2016 (the "Note" or the "Series 2016 Note"), pursuant to the Constitution and laws of the State of Florida, including particularly Chapter 166, Florida Statutes, Section 212.055(2), Florida Statutes, Ordinance No. 2015-22 of Lake County, Florida and Issuer Resolution No. 2016-13 duly adopted by the City Council of the Issuer on August 3, 2016 (the "Resolution") and other applicable provisions of law (collectively, the "Act"), and a Loan Agreement dated August 5, 2016, by and between the Issuer and Florida Community Bank, N.A. (the "Agreement"). Any capitalized undefined term used herein shall have the same meaning as such term has under the Agreement.

As to questions of fact material to our opinion, we have relied upon representations of the Issuer contained in the Resolution and the Agreement and in the certified proceedings and other certifications of public officials furnished to us, without undertaking to verify the same by independent investigation.

Reference is made to the opinion of even date herewith of Williams, Smith & Summers, P.A., Counsel to the Issuer, on which we have solely relied, as to the due creation and valid existence of the Issuer, the due execution and delivery by the Issuer of the Series 2016 Note and the Agreement and compliance by the Issuer with all conditions precedent to the issuance of the Note contained in the ordinances or resolutions of the Issuer.

In addition to the foregoing, we have examined and relied upon such other agreements, certificates, documents, representations and opinions submitted to us, including certifications and representations of public officials and other officers and representatives of the various parties participating in this transaction, as we have deemed relevant and necessary in connection with

the opinions expressed below. We have not undertaken an independent audit, examination, investigation or inspection of the matters described or contained in such agreements, certificates, documents, representations and opinions submitted to us and have relied solely on the facts, estimates and circumstances described and set forth therein.

In our examination of the foregoing, we have assumed the genuineness of the signatures on all documents and instruments, the authenticity of documents submitted as originals, the conformity to originals of documents submitted as copies and the legal capacity of all natural persons.

The scope of our engagement in relation to the issuance of the Series 2016 Note has been limited solely to the examination of facts and laws incident to rendering the opinions expressed herein.

This opinion should not be construed as offering material or an offering circular, prospectus or official statement and is not intended in any way to be a disclosure statement used in connection with the sale or delivery of the Series 2016 Note. In addition, we have not been engaged to and, therefore, do not express any opinion as to compliance by the Issuer with any federal or state statute, regulation or ruling with respect to the sale and distribution of the Series 2016 Note.

Neither the Series 2016 Note nor the interest and premium, if any, payable thereon shall constitute a general obligation or general indebtedness of the Issuer within the meaning of the Constitution and laws of Florida. The Series 2016 Note and the interest and premium, if any, payable thereon do not constitute either a pledge of the full faith and credit of the Issuer or a lien upon any property of the Issuer other than as provided in the Agreement. No owner of the Series 2016 Note or any other person shall ever have the right, directly or indirectly, to require or compel the exercise of any ad valorem taxing power of the Issuer or any other public authority or governmental body to pay the principal of or interest and premium, if any, on the Series 2016 Note or to pay any other amounts required to be paid pursuant to the Series 2016 Note.

The opinions set forth below are expressly limited to, and we opine only with respect to, the laws of the State of Florida and the federal income tax laws of the United States of America.

Based upon the foregoing, we are of the opinion that:

1. The Agreement has been duly authorized, executed and delivered by the Issuer and constitutes a valid and binding obligation of the Issuer enforceable in accordance with its terms.

2. The Series 2016 Note has been duly authorized, executed and delivered by the Issuer and is a valid and binding special obligation of the Issuer enforceable in

accordance with its terms, payable solely from the sources provided therein and in the Agreement.

3. The interest on the Series 2016 Note is excludable from gross income for federal income tax purposes and is not treated as an item of tax preference for purposes of the federal alternative minimum tax imposed on individuals and corporations but is taken into account in determining adjusted current earnings for purposes of computing the alternative minimum tax on corporations. The opinions set forth in the immediately preceding sentence are subject to the condition that the Issuer comply with all requirements of the Internal Revenue Code of 1986, as amended, and the regulations thereunder (the "Code"), that must be met or satisfied in order that interest thereon be, or continue to be, excludable from gross income for federal income tax purposes. The Issuer has covenanted in the Agreement to comply with each such requirement. Failure of the Issuer to comply with any of such requirements may cause the inclusion of interest on the Series 2016 Note in gross income for federal income tax purposes retroactive to the date of issuance of the Series 2016 Note. Other provisions of the Code may give rise to adverse federal income tax consequences to particular holders of the Series 2016 Note. The scope of this opinion is limited to the matters addressed above and we express no opinion regarding other federal tax consequences arising with respect to the Series 2016 Note. In rendering the opinion expressed above, we have assumed continuing compliance with the tax covenants referred to above that must be met after the issuance of the Series 2016 Note in order that interest on the Series 2016 Note not be included in gross income for federal income tax purposes.

4. The Series 2016 Note is exempt from regulation under the Securities Act of 1933, as amended, and the Resolution and the Agreement are exempt from qualification as an indenture under the Trust Indenture Act of 1939, as amended.

We call your attention to the fact that our engagement as Bond Counsel was on the assumption that the purchase of the Note would be funded through a loan with an institutional investor, i.e., Florida Community Bank, N.A. In accordance with our understanding with the parties participating in the closing on the date hereof, we have not passed upon and consequently express no opinion as to the accuracy, adequacy or completeness of any offering literature that may have been used in connection with the offering or placement of the Series 2016 Note. We have not passed upon any matters relating to the condition (financial or otherwise) of the Issuer and no inference should be drawn that we have expressed any opinion on matters relating to the financial ability of the Issuer to perform its obligations under the Agreement or the Series 2016 Note.

We express no opinions in connection with the issuance of the Note other than as expressed herein.

It is to be understood that the rights of the owners of the Series 2016 Note and the enforceability of the Series 2016 Note and the Agreement may be subject to bankruptcy, insolvency, reorganization, moratorium and other similar laws affecting creditors' rights and laws and equitable principles that may affect remedies or injunctive or other equitable relief, and to the exercise of judicial discretion in appropriate cases.

Our opinions expressed herein are predicated upon present law (and interpretations thereof), facts and circumstances, and we assume no affirmative obligation to update the opinions expressed herein if such laws (and interpretations thereof), facts or circumstances change after the date hereof.

Very truly yours,

AKERMAN LLP

No. 4

$11,250,000 CITY OF TAVARES, FLORIDA
INFRASTRUCTURE SALES SURTAX REVENUE NOTE, SERIES 2016

FEDERAL TAX CERTIFICATE

I, Lori Houghton, Finance Director of the City of Tavares, Florida (the "Issuer" or the "City") HEREBY CERTIFY with respect to the Issuer's $11,250,000 Infrastructure Sales Surtax Revenue Note, Series 2016 (the "Note") which is being issued and delivered on the date of this certificate, as follows:

1. The Note is being issued by the Issuer, a municipal corporation of the State of Florida, under and pursuant to the Florida Constitution Chapter 166, Florida Statutes, Section 212.055(2) Florida Statutes, Lake County Ordinance No. 2015-22, the Interlocal Agreement and Issuer Resolution No. 2016-13 (the "Resolution") and a Loan Agreement dated as of the date hereof between the Issuer and Florida Community Bank, N.A. (the "Agreement"). Unless defined herein, capitalized terms have the meanings given them in the Agreement or the Resolution.

2. I am one of the officers of the Issuer charged with the responsibility for issuing the Note.

3. This certificate is made for the purpose of establishing the reasonable expectations of the Issuer as to the amount and use of the proceeds of the Note. It is intended and may be relied upon for purposes of Sections 103 and 148 of the Internal Revenue Code of 1986, as amended (the "Code") as a certification described in Section 1.148-2(b)(2) of the Treasury Regulations. This Federal Tax Certificate is being executed and delivered as part of the record of proceedings in connection with the issuance of the Note.

4. This certificate sets forth the facts, estimates and circumstances now in existence which are the basis for the Issuer's expectation that the proceeds of the Note will not be used in a manner that would cause the Note to be arbitrage bonds under Section 148 of the Code or otherwise cause the interest on the Note to become includable in gross income for federal income tax purposes. The undersigned has investigated such facts, estimates and circumstances. To the best of my knowledge and belief, the certifications set forth below are reasonable and there are no further facts, estimates or circumstances that would materially change such certifications.

5. The Note is being issued for the purpose of providing funds, to finance the acquisition and/or construction of a City owned and operated public safety complex including a police station and fire station and related improvements (the "Project") and to pay costs of issuing the Note. No proceeds of the Note are being used to pay for costs incurred by the City more than 60 days prior to the date February 3, 2016 the date the City adopted Resolution No. 2016-03 in compliance with U.S. Treasury Regulation 1.150-(2)(e). The Note is secured by and payable from revenues derived by the Issuer from its Infrastructure Sales Surtax received by the City pursuant to Section 212.055(2), Florida Statutes and the Interlocal Agreement. The Note is not secured by or reasonably required reserve or replacement fund. The City will during the term of the Note use all of the Project to carry out the municipal purposes of the City. The City will not enter into any contracts or arrangements pursuant to which persons who are not state or local governments pursuant to which such persons have a right to use any component of the Project or have a preferential right to use any component of the Project on a basis not available to members of the general public.

6. On the basis of the facts, estimates and circumstances in existence on the date hereof, I reasonably expect all of the proceeds of the Note will be applied to pay costs of the Project and costs of issuing the Note as provided in the Agreement.

7. It is not expected that the Project will be sold or otherwise disposed of by the Issuer prior to the final maturity of the Note, except such minor portions thereof as may be disposed of due to normal wear, obsolescence or depreciation in the ordinary course of business.

8. The proceeds of the Note together with the available earning from the Note proceeds do not exceed the amount necessary for the purposes for the Note as described in paragraph 5 and 6 above.

9. The City has entered into, or within six (6) months of the date hereof will have entered into, one or more binding contracts to third parties obligating aggregate expenditures of at least 5% of the sale proceeds of the Note on the Project. The proceeds of the Note are reasonably expected to be expended upon the Project, together with any investment earnings thereon, within three years from the date hereof. It is expected that work toward completion of the Project and the allocation of such proceeds and interest earnings thereon to expenditures will proceed with due diligence. Such proceeds (including investment earnings) to be expended on the Project can be invested prior to the earlier of the date of such expenditure or August 4, 2019, without restriction as to yield. After August 4, 2019 such proceeds will be invested in obligations producing a yield not in excess of the yield on the Note plus one-eighth percent, or in obligations producing a yield in excess of such yield provided the City makes "yield reduction payments" as permitted by Treas. Reg. §1.148-5(c), or in obligations the interest on which is excluded from gross income for federal income tax purposes and which is not an item of "tax preference" for purposes of the federal alternative minimum tax, unless bond counsel first

delivers an opinion that such proceeds can continue to be invested without regard to yield restriction provided that investment earnings need not be so invested until one (1) year after the date of receipt thereof.

10. The yield on the Note is determined under the rules set forth in Treas. Reg. §1.148-4. The yield on the Note has been calculated by the use of semiannual compounding using the thirty (30) days per month/360 days per year convention. The yield on the Note, computed as of the Delivery Date, is at least 2.9502%. The Issuer's financial advisor has made certain representations regarding the interest rate on the Note in Exhibit A hereto.

11. None of the proceeds of the Note will be used as a substitute for other funds (i) which were otherwise to be used to construct the Project; (ii) which will not be so used; and (iii) which have been or will be used, directly or indirectly, to acquire investment property producing a yield in excess of the yield on the Note.

12. The Issuer does not presently expect to enter into any "hedging transaction" (i.e., transactions involving interest rate swaps, interest rate caps or collars or similar mechanisms to shift the interest rate risk of payment) in respect of the Note.

13. No proceeds of the Note will be invested in investments having a yield to the Issuer that is substantially guaranteed for four (4) years or more.

14. No obligations of the Issuer are being sold less than fifteen (15) days apart from the date of sale of the Note, pursuant to the same plan of financing with the Note and which are reasonably expected to be paid from substantially the same source of funds as the Note.

15. The weighted average maturity of the Note of 9.9205 years does not exceed 120% of the weighted average reasonably expected economic life of the Project computed as of the

later of the date hereof or the date the various components of the Project are expected to be placed in service.

16. No portion of the proceeds of the Note will be invested, directly or indirectly, in federally insured deposits or accounts other than for an initial temporary period until the proceeds are needed for the Project or amounts on deposit in a bona fide debt service fund.

17. The Issuer has covenanted in the Agreement that so long as the Note remain outstanding it will comply with the requirements applicable to it to preserve the exclusion of interest on the Note from gross income for federal income tax purposes. The City in connection with the issuance of its Capital Improvement Revenue Note, Series 2014 adopted procedures to provide compliance with the rebate provisions of Section 148(f) of the Code and the remedial action provisions of the Treasury regulations which adoption and agreement to comply is hereby affirmed.

18. None of the proceeds of the Note will be used (directly or indirectly) to make or finance loans from the Issuer to any persons.

19. The Issuer will not take any action which would cause the Note to be "private activity bonds" within the meaning of Section 141 of the Code. The Issuer will not permit any person other than a state or local governmental unit or as a member of the general public (a "Nonexempt Person") to use, through sale, lease, management contract, output contract or similar agreement, any portions of the Project.

20. The Issuer acknowledges that in determining whether all or any portion of the Project is used, directly or indirectly, in the trade or business of a Nonexempt Person for purposes of Paragraph 19 above, use of any portion of the Project by a Nonexempt Person pursuant to a lease, management contract, service contract, output contract or other arrangement

must be examined. The Issuer represents that all management and service contracts with persons who are not employees of the Issuer for use of any portion of the Project will comply with the guidelines set forth in IRS Revenue Procedure 97-13 any amendments thereto and the applicable Treasury Regulations, unless the Issuer receives an opinion from Bond Counsel that such contract will not adversely impact the exclusion of interest on the Note from gross income for purposes of federal income taxation. The Issuer agrees to maintain copies of all leases, management contracts, service contracts, output contracts, and other preferential use arrangements with Nonexempt Persons with respect to the use of any portion of the Project throughout the term of the Note and for a period of six years thereafter.

21. No action that overburdens the tax-exempt market (within the meaning of Treas. Reg. § 1.148-10(a)) has been or is expected to be taken in connection with the Note. In particular, no portion of the Note has been issued earlier, allowed to remain outstanding longer, than is otherwise reasonably necessary to accomplish the governmental purposes of the Note. Furthermore, each action taken or expected to be taken in connection with the Note would reasonably be taken if the interest on the Note were not excluded from gross income for federal income tax purposes (assuming that the hypothetical taxable interest rates would be the same as the actual tax-exempt interest rates).

22. The City has neither received notice that its certificate may not be relied upon with respect to its issues, nor has it been advised that any adverse action by the Commissioner of the Internal Revenue Service is contemplated.

23. The City agrees to (a) impose such limitations on the investment or use of moneys or investments related to the Note, (b) enter into such agreements, and (c) perform such other

acts as may be necessary under the Code to preserve the exclusion from gross income for purposes of federal income taxation of interest on the Note.

24. The City agrees to file all information statements as may be required by the Code.

To the best of my knowledge and belief there are no facts, estimates or circumstances other than those expressed herein that materially affect the expectations herein expressed, and, to the best of my knowledge and belief, the Issuer's expectations are reasonable. I further represent that the Issuer has had the opportunity to discuss the certifications set forth above with Bond Counsel and the Issuer expects and intends to be able to comply with the provisions and procedures set forth herein, including Section 148 of the Code.

IN WITNESS WHEREOF, I have hereunto set my hand as of this 5th day of August, 2016.

CITY OF TAVARES, FLORIDA

By: _____
Finance Director

AGENDA SUMMARY
TAVARES CITY COUNCIL
AUGUST 3, 2016

AGENDA TAB NO. 9

SUBJECT TITLE: RESOLUTION #2016-14 – FDOT GRANT AGREEMENT FOR TAV-LEE TRAIL RAILROAD CROSSING DEVICES

OBJECTIVE:

For Council to approve the attached resolution authorizing execution of a railroad reimbursement grant agreement between the Florida Department of Transportation (FDOT), Florida Central Railroad and the City of Tavares for the installation and future maintenance of railroad grade crossing traffic control devices.

SUMMARY:

The construction of the Tav-Lee Trail extension will be funded and constructed by the Florida Department of Transportation through a Local Agency Program (LAP) grant. The project will include construction of a small segment of the trail across the railroad right of way from the City property to South Sinclair Avenue and the extended trail will cross South Sinclair, when completed. In order to move forward, FDOT requires installation of railroad crossing traffic control devices. Staff has worked with the Lake Sumter MPO and FDOT District 5 staff to secure a grant in the amount of $224,000 (attached) for Florida Central to complete the installation. Under this agreement, FDOT will directly reimburse Florida Central for the work. The City would be responsible for sharing 50% of the cost of annual maintenance of maintenance with Florida Central, which will be $3,600 for the next 5 years.

OPTIONS:

1. Approve the attached resolution authorizing execution of the grant agreement between the City, FDOT and Florida Central Railroad.
2. Do not approve the attached grant agreement between the City, FDOT and Florida Central Railroad.

STAFF RECOMMENDATION:

Move to approve Resolution #2016-14 authorizing execution of the grant agreement between the City, FDOT, and Florida Central Railroad

FISCAL IMPACT: The $224,000 in grant funding will be provided directly to Florida Central Railroad for reimbursement of their installation expenses for the railroad crossing devices. The City will be responsible for budgeting and incurring the expense of $1,800 in annual maintenance costs in accordance with the fee schedule per the grant agreement. The maintenance cost schedule is reviewed every 5 years and adjusted for CPI.

RESOLUTION 2016 -14

RESOLUTION OF CITY OF TAVARES, FLORIDA AUTHORIZING EXECUTION OF A RAILRAOD REIMBURSEMENT AGREEMENT FOR THE INSTALLATION OF GRADE CROSSING TRAFFIC CONTROL DEVICES AND FUTURE MAINTENANCE AND ADJUSTMENT OF SAID DEVICES

WHEREAS, the State of Florida Department of Transportation is constructing the Tav-Lee Trail Extension on a portion of the Public Road System on S. Sinclair Avenue which shall call for the installation and maintenance of railroad grade crossing traffic control devices for railroad grade crossing over or near said roadway; and

NOW, THEREFORE, BE IT RESOLVED BY THE CITY COUNCIL OF THE CITY OF TAVARES FLOIDA

That the City of Tavares enter into a Railroad Reimbursement Agreement with the State of Florida Department of Transportation and the Florida Central Railroad Company Inc. for the installation

DULY PASSED AND ADOPTED this _____ day of _____, 2016.

_____
Lori Pfister, Mayor

ATTEST:

_____
Nancy Barnett, City Clerk

Approved as to form and legality:

_____
Robert Q. Williams, City Attorney

Florida Department of Transportation

RICK SCOTT
GOVERNOR

719 S. Woodland Boulevard
DeLand, Florida 32720-6834

JIM BOXOLD
SECRETARY

July 19, 2016

Mr. Bob Tweedie, CM
City of Tavares Economic Development Director
201 E. Main Street
Tavares, FL 32778

Subject: ***RAILROAD REIMBURSEMENT AGREEMENT***
GRADE CROSSING TRAFFIC CONTROL DEVICES-MUNICIPAL
AND CITY RESOLUTION
FM No. 433673-1-57-01
S. Sinclair Avenue
City of Tavares

Railroad Crossing No. 625189-P
Railroad Milepost Number: ST-783.50
Lake County

Dear Bob,

Annually, the Department of Transportation assembles a District Diagnostic Team to conduct on-site evaluations of railroad crossings that have been identified as potentially hazardous. Representatives from the Department's Safety and Rail Offices and Florida Central Railroad, Inc. evaluated the above rail-highway grade crossing in Tavares and have determined that with the Tav-Lee trail encroaching the above crossing, the signals should be upgraded from crossbucks to flashing lights and gates and pedestrian gates.

The purpose of this letter is to advise you that the safety improvements identified for this crossing have been included in the Department's Adopted Work Program. The installation of the recommended railroad signal improvements will be at the Department's expense using Federal Safety Funds.

Enclosed is one copy of the Department's standard ***Railroad Reimbursement Agreement, Grade Crossing Traffic Control Devices-Municipal and City Resolution.*** Please return this executed copy of the Agreement and Resolution to me for further processing by the Department. Once all parties have signed, a copy of the fully executed Agreement and Resolution will be returned to you.

If you have any questions, please feel free to contact me.

Sincerely,

Jim

Jim Ganey
District Railroad Coordinator
719 S. Woodland Blvd. – MS 3-562
DeLand, FL 32720-6834
386-943-5331

cc: Scott Allbritton - FDOT

STATE OF FLORIDA DEPARTMENT OF TRANSPORTATION

RAILROAD REIMBURSEMENT AGREEMENT
GRADE CROSSING TRAFFIC CONTROL DEVICES - MUNICIPAL

FINANCIAL PROJECT NO.	ROAD NAME OR NUMBER	COUNTY NAME	PARCEL & R/W NUMBER	FAP NUMBER
43367315701	S. SINCLAIR AVE.	LAKE	1(11000-SIGG)	OOS5-053-J

THIS AGREEMENT, made and entered into this _____ day of _____, 2016, by and between the STATE OF FLORIDA DEPARTMENT OF TRANSPORTATION, hereinafter called the DEPARTMENT, and FLORIDA CENTRAL RAILROAD COMPANY, INC., a corporation organized and existing under the laws of FLORIDA, with its principal place of business in the City of PLYMOUTH, County of ORANGE, State of FLORIDA, hereinafter called the COMPANY; and the City of TAVARES, a municipal corporation, hereinafter called the CITY.

WITNESSETH:

WHEREAS, the DEPARTMENT is constructing, reconstructing or otherwise changing a portion of the Public Road System, designated by the Financial Project ID 433673-1-57-01, on S. SINCLAIR AVE., which crosses at grade the right of way and tracks of the COMPANY'S Milepost ST-783.50, FDOT/AAR Crossing Number 625189-P, at or near TAVARES, as shown on DEPARTMENT'S Plan Sheet No. 17881&17882, attached hereto as a part hereof; and

NOW, THEREFORE, in consideration of the mutual undertakings as herein set forth, the parties hereto agree as follows:

1. The COMPANY shall furnish the necessary materials and install Automatic Grade Crossing Signals Type III Class III and/or other traffic control devices at said location on an actual cost basis and in accordance with (1) the attached detailed statement of the work, plans, and specifications; and (2) the DEPARTMENT'S Plans and Standard Index Number 17882 attached hereto and made a part hereof.

2. After installation of said signals is completed, fifty (50%) percent of the expense thereof in maintaining the same shall be borne by the CITY and fifty (50%) percent shall be borne by the COMPANY, as enumerated by the Schedule of Annual Cost of Automatic Highway Grade Crossing Devices attached hereto and by this reference made a part hereof and subject to future revision.

3. After said signals have been installed and found to be in satisfactory working order by the parties hereto, the same shall be immediately put into service, operated and maintained by the COMPANY so long as said COMPANY or its successors or assigns shall operate the said signals at said grade crossing; or until it is agreed between the parties hereto that the signals are no longer necessary or until the said crossing is abandoned; or legal requirements occur which shall cease operation of signals thereat.

The COMPANY agrees that any future relocation or adjustment of said signals shall be performed by the COMPANY, but at the expense of the party initiating such relocation. Upon relocation the maintenance responsibilities shall be in accordance with the provisions of this agreement. It is further agreed that the cost of maintaining any additional or replacement signal equipment at the same location will be shared as provided under Paragraph 2. above.

4. Unless otherwise agreed upon herein, the CITY agrees to ensure that at the crossing the advance warning signs and railroad crossing pavement markings will conform to the U.S. Department of Transportation Manual on Uniform Traffic Control Devices within 30 days of notification that the railroad signal improvements have been completed and that such signs and pavement markings will be continually maintained at an acceptable level.

5. The COMPANY hereby agrees to install and/or adjust the necessary parts of its facilities along said road in accordance with the provisions set forth in the:

☐ (a) DEPARTMENT Procedure No. 725-080-002 Appendix D.4, and Rule 14.57.011 "Public Railroad-Highway Grade Crossing Costs", Florida Administrative Code.

☒ (b) Federal Highway Administration Federal-Aid Policy Guide, 23 C.F.R. Subchapter G, Part 646, Subpart B, and 23 C.F.R., Subchapter B, Part 140, Subpart I,

nd any supplements thereto or revisions thereof, which, by reference hereto, are made a part hereof. The COMPANY further agrees to do all of such work, with its own forces or by a contractor paid under a contract let by the COMPANY, all under the supervision and approval of the DEPARTMENT and the Federal Highway Administration, when applicable.

6. The DEPARTMENT hereby agrees to reimburse the COMPANY for all costs incurred by it in the installation and/or adjustment of said facilities, in accordance with the provisions of Procedure No. 725-080-002 Appendix D-4 "Billing Requirements," and any supplements thereto or revisions thereof. It is understood and agreed by and between the parties hereto that preliminary engineering costs not incorporated within this agreement shall not be subject to payment by the DEPARTMENT.

7. Attached hereto, and by this reference made a part hereof, are plans and specifications of the work to be performed by the COMPANY pursuant to the terms hereof, and an itemized estimate of the cost thereof in the amount of $ 224,000.00 . All work performed by the COMPANY pursuant hereto, shall be performed according to these plans and specifications as approved by the DEPARTMENT and the Federal Highway Administration if federal aid participating; and all subsequent plan changes shall likewise be approved by the DEPARTMENT and the Federal Highway Administration, when applicable.

8. All labor, services, materials, and equipment furnished by the COMPANY in carrying out the work to be performed hereunder shall be billed by the COMPANY direct to the DEPARTMENT. Separate records as to the costs of

contract bid items and force account items performed for the COMPANY shall also be furnished by the COMPANY to the DEPARTMENT.

9. The COMPANY has determined that the method to be used in developing the relocation or installation cost shall be as specified for the method checked and described hereafter:

☒ (a) Actual and related indirect costs accumulated in accordance with a work order accounting procedure prescribed by the applicable Federal or State regulatory body.

☐ (b) Actual and related indirect costs accumulated in accordance with an established accounting procedure developed by the COMPANY and approved by the DEPARTMENT.

☐ (c) An agreed lump sum $ _____ , as supported by a detail analysis of estimated cost attached hereto. (NOTE: This method is not applicable where the estimated cost of the proposed adjustment exceeds $100,000.)

10. The installation and/or adjustment of the COMPANY'S facility as planned ☐ will ☒ will not involve additional work over and above the minimum reimbursable requirements of the DEPARTMENT. (If upgrading and/or nonreimbursable work is involved at the option of the COMPANY, then credit against the cost of the project is required and will be governed by the method checked and described hereafter):

☐ (a) _____ % will be applied to the final billing of work actually accomplished to determine required credit for (betterment) and/or (expired service life) and/or (nonreimbursable segments).

☐ (b) All work involving nonreimbursable segments will be performed by special COMPANY work or job order number apart and separate from the reimbursable portion of the work; such work or job order number to be _____ . The COMPANY further agrees to clearly identify such additional work areas in the COMPANY'S plans and estimates for the total work covered by this Agreement.

☐ (c) $ _____ credited for ☐ betterment ☐ expired service life ☐ nonreimbursable segments in accord with Article 9.(c) hereinabove.

11. It is specifically agreed by and between the DEPARTMENT and the COMPANY that the DEPARTMENT shall receive fair and adequate credit for any salvage which shall accrue to the COMPANY as a result of the above installation and/or adjustment work.

12. It is further agreed that the cost of all improvements made during this adjustment work shall be borne by the COMPANY, subject only to the DEPARTMENT bearing such portion of this cost as represents the cost of adjustment of previously existing facility, less salvage credit as set forth in the immediately preceding paragraph.

13. Upon completion of the work the COMPANY shall, within one hundred eighty (180) days, furnish the DEPARTMENT with two (2) copies of its final and complete billing of all costs incurred in connection with the work performed hereunder, such statement to follow as closely as possible the order of the items contained in the estimate attached hereto. The totals for labor, overhead, travel expense, transportation, equipment, material and supplies, handling costs and other services shall be shown in such a manner as will permit ready comparison with the approved plans and estimates. Materials shall be itemized where they represent major components of cost in the relocation following the pattern set out in the approved estimate as closely as is possible. Salvage credits from recovered and replaced permanent and recovered temporary materials shall be reported in said bills in relative position with the charge for the replacement or the original charge for temporary use.

The final billing shall show the description and site of the Project; the date on which the first work was performed, or, if preliminary engineering or right-of-way items are involved, the date on which the earliest item of billed expense was incurred; the date on which the last work was performed or the last item of billed expense was incurred; and the location where the records and accounts billed can be audited. Adequate reference shall be made in the billing to the COMPANY'S records, accounts and other relevant documents. All cost records and accounts shall be subject to audit by a representative of the DEPARTMENT. Upon receipt of invoices, prepared in accordance with the provisions of the above indicated Reimbursement Policy, the DEPARTMENT agrees to reimburse the COMPANY in the amount of such actual costs as approved by the DEPARTMENT'S auditor.

14. Payment shall be made only after receipt and approval of goods and services unless advance payments are authorized by the DEPARTMENT's Comptroller under Section 334.044(29), F.S., or by the Department of Financial Services under Section 215.422(14), Florida Statutes (F.S.).

15. In accordance with Section 287.058, Florida Statutes, the following provisions are in this Agreement: If this Contract involves units of deliverables, then such units must be received and accepted in writing by the Contract Manager prior to payments. Bills for fees or other compensation for services or expenses shall be submitted in detail sufficient for a proper preaudit and postaudit thereof.

16. Bills for travel expenses specifically authorized in this agreement shall be submitted and paid in accordance with DEPARTMENT Rule 14-57.011 "Public Railroad-Highway Grade Crossing Costs" and the Federal Highway Administration Federal-Aid Policy Guide, Subchapter B, Part 140, Subpart I "Reimbursement for Railroad Work."

17. In accordance with Section 215.422, Florida Statutes, the following provisions are in this Agreement: Contractors providing goods and services to the Department should be aware of the following time frames. Upon receipt, the Department has five (5) working days to inspect and approve the goods and services, unless the Agreement specifies otherwise. The Department has 20 days to deliver a request for payment (voucher) to the Department of Financial Services. The 20 days are measured from the latter of the date the invoice is received or the goods or services are received, inspected and approved.

If a payment is not available within 40 days, a separate interest penalty at a rate as established pursuant to Section 215.422(3)(b), Florida Statutes, will be due and payable, in addition to the invoice amount, to the Contractor. Interest penalties of less than one (1) dollar will not be enforced unless the Contractor requests payment. Invoices which have to be returned to a Contractor because of Contractor preparation errors will result in a delay in the payment. The invoice payment requirements do not start until a properly completed invoice is provided to the Department.

A Vendor Ombudsman has been established within the Department of Financial Services. The duties of this individual include acting as an advocate for contractors/vendors who may be experiencing problems in obtaining timely payment(s) from a state agency. The Vendor Ombudsman may be contacted at (850) 413-5516 or by calling the Division of Consumer Services at 1-877-693-5236.

18. In the event this contract is for services in excess of TWENTY FIVE THOUSAND DOLLARS ($25,000.00) and a term for a period of more than one year, the provisions of Section 339.135(6)(a), Florida Statutes, are hereby incorporated:

> The Department, during any fiscal year, shall not expend money, incur any liability; or enter into any contract which, by its terms, involves the expenditure of money in excess of the amounts budgeted as available for expenditure during such fiscal year. Any contract, verbal or written, made in violation of this subsection is null and void, and no money may be paid on such contract. The Department shall require a statement from the Comptroller of the Department that such funds are available prior to entering into any such contract or other binding commitment of funds. Nothing herein contained shall prevent the making of contracts for periods exceeding one year, but any contract so made shall be executory only for the value of the services to be rendered or agreed to be paid for in succeeding fiscal years; and this paragraph shall be incorporated verbatim in all contracts of the Department which are for an amount in excess of TWENTY FIVE THOUSAND DOLLARS ($25,000.00) and which have a term for a period of more than one year.

19. In accordance with Section 287.133 (2)(a), Florida Statutes, the following provisions are included in this Agreement:

> A person or affiliate who has been placed on the convicted vendor list following a conviction for a public entity crime may not submit a bid, proposal, or reply on a contract to provide any goods or services to a public entity; may not submit a bid, proposal, or reply on a contract with a public entity for the construction or repair of a public building or public work; may not submit bids, proposals, or replies on leases of real property to a public entity; may not be awarded or perform work as a contractor, supplier, subcontractor, or consultant under a contract with any public entity; and may not transact business with any public entity in excess of the threshold amount provided in s.287.017 for CATEGORY TWO for a period of 36 months following the date of being placed on the convicted vendor list.

20. In accordance with Section 287.134(2)(a), Florida Statutes, the following provisions are included in this Agreement:

> An entity or affiliate who has been placed on the discriminatory vendor list may not submit a bid, proposal, or reply on a contract to provide any goods or services to a public entity; may not submit a bid, proposal, or reply on a contract with a public entity for the construction or repair of a public building or public work; may not submit bids, proposals, or replies on leases of real property to a public entity; may not be awarded or perform work as a contractor, supplier, subcontractor, or consultant under a contract with any public entity; and may not transact business with any public entity.

21. In accordance with Section 287.0582, Florida Statutes, the following provision is included in this Agreement:

> The Department's obligation to pay under this section is contingent upon an annual appropriation by the Florida Legislature.

22. The COMPANY covenants and agrees that it will indemnify and hold harmless the DEPARTMENT and all of the DEPARTMENT'S officers, agents, and employees from any claim, loss, damage, cost charge, or expense arising out of any act, action, neglect, omission or delay by the COMPANY during the performance of the contract,

whether direct or indirect, and whether to any person or property to which the DEPARTMENTor said parties may be subject, except that neither the COMPANY nor any of its sub-contractors will be liable under this section for damages arising out of injury or damage to persons or property directly caused or resulting from the sole negligence of the DEPARTMENT or any of its officers, agents, or employees.

23. COMPANY shall:

1. utilize the U.S. Department of Homeland Security's E-Verify system to verify the employment eligibility of all new employees hired by the COMPANY during the term of the contract; and

2. expressly require any subcontractors performing work or providing services pursuant to the state contract to likewise utilize the U.S. Department of Homeland Security's E-Verify system to verify the employment eligibility of all new employees hired by the subcontractor during the contract term.

24. It is understood and agreed by the parties to this Agreement that if any part, term, or provision of this Agreement is held illegal by the courts or in conflict with any law of the State of Florida, the validity of the remaining portions or provisions shall not be affected, and the rights and obligations of the parties shall be construed and enforced as if the Agreement did not contain the particular part, term, or provision held to be invalid.

25. Any questions or matters arising under this Agreement as to validity, construction, enforcement, formance, or otherwise, shall be determined in accordance with the laws of the State of Florida. Venue for any action arising out of or in any way related to this Agreement shall lie exclusively in a state court of appropriate jurisdiction in Leon County, Florida.

26. The parties agree to bear their own attorney's fees and costs with respect to this Agreement.

27. The parties agree that this Agreement is binding on the parties, their heirs-at-law, and their assigns and successors in interest as evidenced by their signatures and lawful executions below.

28. A modification or waiver of any of the provisions of this Agreement shall be effective only if made in writing and executed with the same formality as this Agreement.

Company Address 1600 Progress Dr.
Albertville, AL 35950
US

PROGRESS RAIL SERVICES
A Caterpillar Company

Quote Information

Quote Number	00009944	Prepared By	Garry Caudill
Created Date	8/12/2013	Title	Account Executive
Account	Florida Central Railroad Company	Phone	(502) 368-6562 x2310
		E-mail	gcaudill@progressrail.com

Quote Line Items

QTY	U/M	Line Description	Sales Price	Total Price
1.00	LOT	Updated Price Estimate For A New Grade Crossing Signal System Located On 8th Street In Apopka, Florida (DOT #625271J).	$206,364.00	$206,364.00 + 17,636.00 INFLATION $224,000.00

Grand Total $206,364.00

Shipping Information and Notes

Shipping Info. Price includes the delivery, unloading and handling of the materials until the installation is complete and accepted by the customer.

Notes Scope of Work: Remove and replace the existing signal system with a new system. The new system to include a new instrument shelter using a PMD-3 for train detection equipment and plug-in relays to control the signals. The new signals will be flasher and gates using 12" LED light units. Each signal equipped with pole mounted bell, gate mechanism, gate arm, counterweight arms, railroad crossing sign, emergency notification sign, foundation and wiring harnesses. Price includes 2 new separate pedestrian gates for the sidewalk. Price includes moddifying the existing shelter to house the adjacent pedestrian / bicycle trail crossing signal system only. Price includes all required ground materials to complete the system and all required FRA Rule 234 testing and documentation.

The above price is based on the following provisions:

1. Price does not include tax of any kind.
2. Price does not include flagman for the crossing during train operations.
3. Commercial 110 volt ac power must be available within 75' of crossing.
4. Price does include estimated administration cost incurred by railroad.
5. Price does not include culvert or drainage work.
6. Price does not include retaining wall work or sidewalk repairs.
7. Price does not include any insulated track materials or installation.
8. Price does include conduits for under the roadway and track.
9. Price based on one crew mobilization.
10. Price does include railroad protective liability insurance.
11. Price does not include a bid bond, payment bond or performance bond.
12. Price does not include pavement markings or the advance warning signs.

Installation is based on no hindering obstacles, such as rock, water, or utilities that may interfere with the installation and operation of proposed signal system.

The above price is for budgeting purposes only and subject to change per final approved plans and detailed material lists.

Delivery is estimated at 90 to 120 days after project is authorized.

Crossing No: 625189P	Roadway: S SINCLAIR AVE	RR Street:		District: 5 County: Lake
PUBLIC HWY	AT GRADE Residential	City: Tavares	IN CITY	OPEN--TRACK ACTIVE

F 2016:	SR No.:		RR Company:	FCEN	Date: 06/24/2015
Ra... 2015: 3277	CR No.:		Division Name:	TAMPA	Team Members: Scott Allbritton-FDOT; Jim Ganey-FDOT; Laura Regalado-FDOT; John Barragan-FDOT; Henry Parrish-FDOT; Matt Schwerin-FCR and Shawn Iacono-FCR
Rank 2014:	US No.:		Subdivision Name:	ORLANDO	
	Latitude:	28.800500	Branch Name:	ST 830	
	Longitude:	-81.730000	RR Milepost:	0.17	

Field Review Comments: Proposed trail crossing, future amphitheater and boat ramp.

Team Recommendations: 2-FL&G'S; CABINET, POWER, CABLE, CONDUIT, ONE PED GATE AND A PMD-3.

Highway Speed:	10	Train Speed Range:	5-10
Crossing Angle:	60-90 DEG	Max Time Table Speed:	10
AADT:	377 (2008)	Day Thru/Switch:	0/2
Percent Trucks:	12 (2009)	Night Thru/Switch:	0/0
School Buses:	0 (2014)	Train Service:	Freight, Tourist/Other
Street Types:	Two-Way Street	Passenger Count/Day:	2
Thru Lanes:	2	Train Count Date:	03/31/2011
Aux Lanes:	0	Main Tracks:	1
Hazmat Route?	NO	Other Tracks:	(0) Spur/Lead
Emergency Services Route?	YES		
Emergency Notification Signs:	NO	Train Signals?	NO
Crossbuck(4x4 post):	2	Train Signal Proximity:	NO
Crossbuck Sign:	2	Train Detection:	None
Stop Sign:	2	Event Recorder?	
Yield Sign:	0	Number of Bells:	0
I round Clearance Signs:	0	Post Mounted Flashing Lights:	0
Exempt Signs:			
Trespass Signs:	YES	Roadway Gate Count:	0
		Pedestrian Gate Count:	
		Gates:	
		Cantilevered Flashing Over Traffic:	0
		Cantilevered Flashing Not Over Traffic:	0
		Intersecting Roadway?	YES
		Signalized?	NO
		Interconnection:	Not Interconnected
		Traffic Signals Controlling?	
		Preemption:	
		Traffic Pre-Signals?	NO
		8" Count:	0
		12" Count:	0
		LED Count:	0
		Install - Upgrade:	—

W10-1	0	R10-6a	0	W8-1	0
W10-2	0	R11-2	0	W10-8	0
W10-3	0	R15-2P	0	W10-9	0
W10-4	0	R15-6	0	W10-9P	0
W10-11	0	R15-6a	0	W10-11a	0
W10-12	0	R15-7	0	W10-11b	0
R3-1a	0	R15-7a	0	W10-13P	0
R3-2a	0	R15-8	0	W10-14P	0
R8-8	0	Pvt Crossing	0	W10-14aP	0
R8-9	0	Look Out	0	W10-15P	0
R8-10	0	R8-8 w/Beacon	0	Slow	0
R8-10a	0	W3-1		W10-1w/Beacon	0
R10-6	0	W3-3		LED Signs	0

Surface Installment Date:		Maintenance Responsibility:	CITY
Surface Type:	ASPHALT	Roadway Paved:	YES
Pvmt Mrk:	NONE	Tracks run down street?	NO
Surface Condition:	EXCELLENT	Sidewalks on Crossing Approach?	NO
Approach:	LOS C = Minor erosion	Sidewalks Thru Crossing?	N/A
Vehicle Reaction:	LOS C = Shaking	Crossing illuminated?	YES
r Reaction:	LOS A = No reaction	Commerical Power?	YES
Rail/Pad Movement:	LOS A = Smooth	Alternative Power?	NO

Incident History:

Recommended Warning Device: XBUCKS

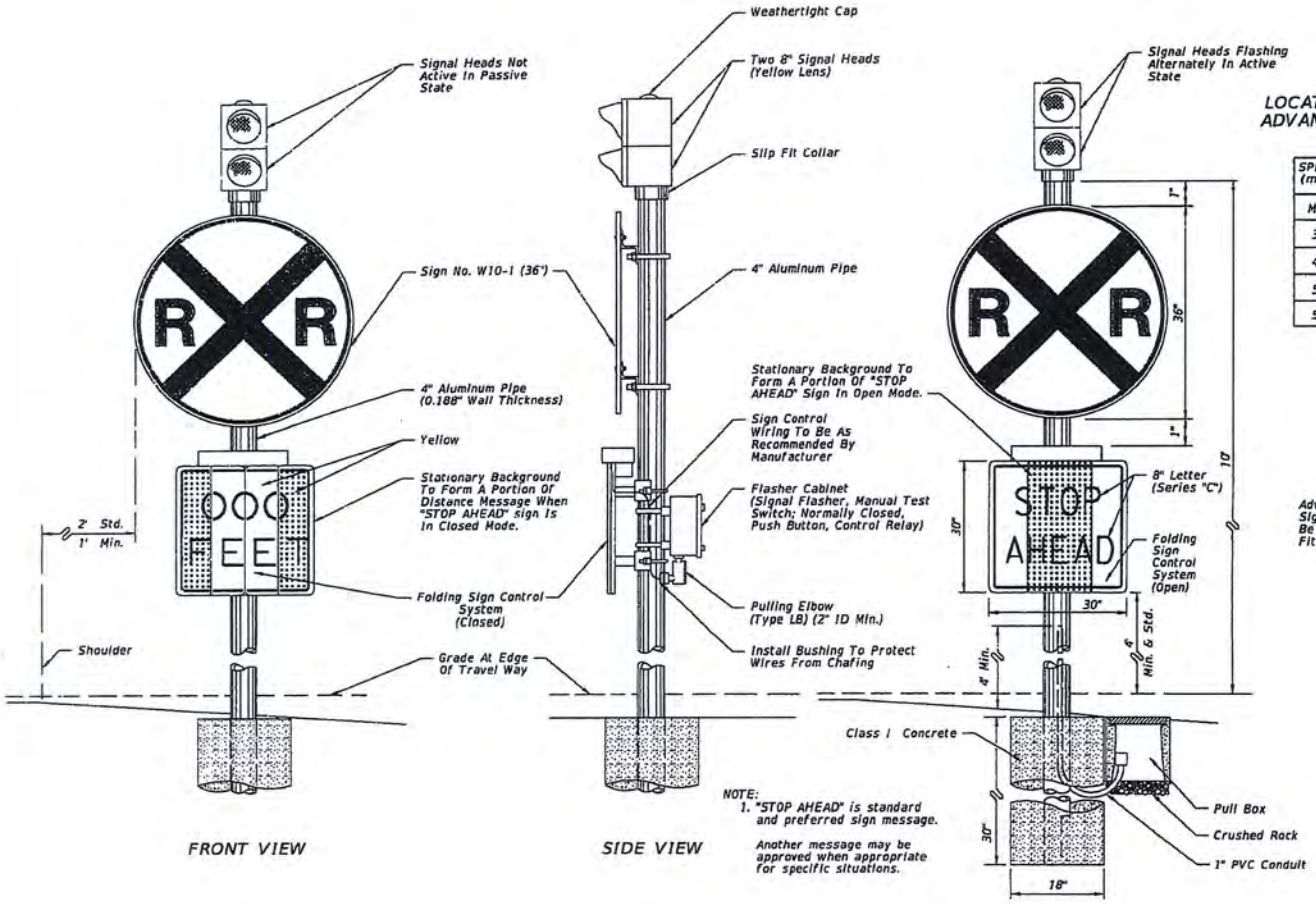

NOTE:
1. "STOP AHEAD" is standard and preferred sign message.

Another message may be approved when appropriate for specific situations.

LOCATION OF THE ADVANCE WARNING SIGN

SPEED (mph)	DISTANCE (ft)
Min.	50
30	75
40	125
50	250
55	325

The Distance Is Measured Along Right Edge Of Pavement From RR Stop Bar To Sign Advance Warning Sign.

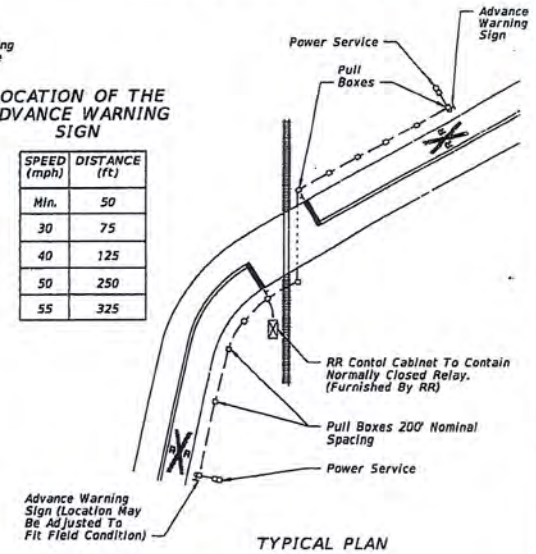

TYPICAL PLAN

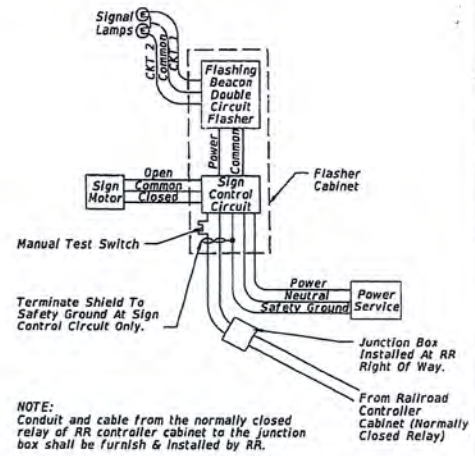

NOTE:
Conduit and cable from the normally closed relay of RR controller cabinet to the junction box shall be furnish & installed by RR.

FUNCTIONAL BLOCK DIAGRAM

LAST REVISION	REVISION	DESCRIPTION:			INDEX NO.	SHEET NO.
07/01/05			FDOT 2016 DESIGN STANDARDS	ADVANCE WARNING FOR R/R CROSSING	17881	1 of 1

6/10/2015 10:32:38 AM

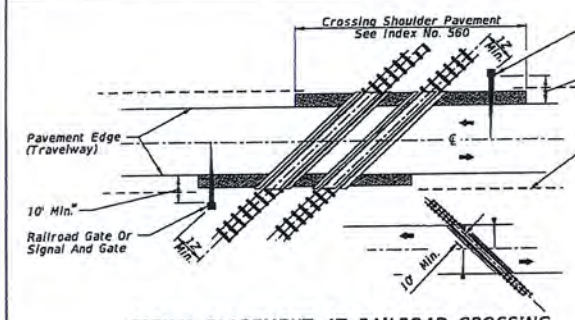

SIGNAL PLACEMENT AT RAILROAD CROSSING
(2 - LANE DESIGN)

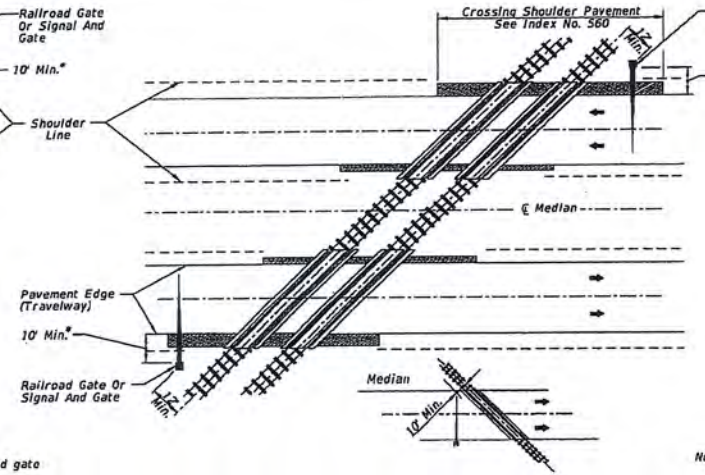

SIGNAL PLACEMENT AT RAILROAD CROSSING
(4 - LANE DESIGN)

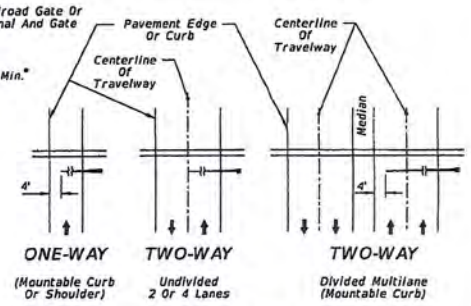

Note:
Arrows denote direction of travel not pavement markings.

FIGURE 1

Gate Length Requirements
See Note 5 Sheet 3

General Notes

1. No guardrail is proposed for signals; however, some form of impact attenuation device may be specified for certain locations.
2. Advance flasher to be installed when and if called for in plans or specifications.
3. Top of foundation shall be no higher than 4" above finished shoulder grade.
4. Type of traffic control device
   I Flashing signals
   II Flashing signals with cantilever
   III Flashing signals with gate
   IV Flashing signals with cantilever and gate
   V Gate
5. Class of traffic control devices
   I Flashing signals-one track
   II Flashing signals-multiple tracks
   III Flashing signals and gates-one track
   IV Flashing signals and gates-multiple tracks

Note:
Two separate foundations may be required (one for signals, one for gate), depending on type of equipment used.

* When 10' is deemed impracticle the control device can be located as close as 2' from the edge of a paved shoulder but not less than 6' from the edge of the near traffic lane.

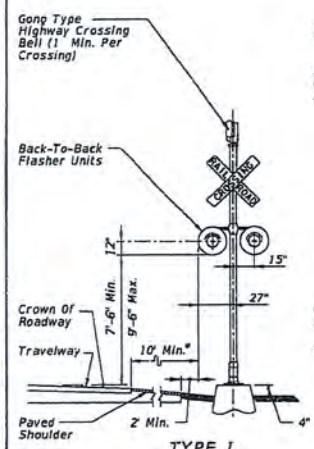

TYPE I

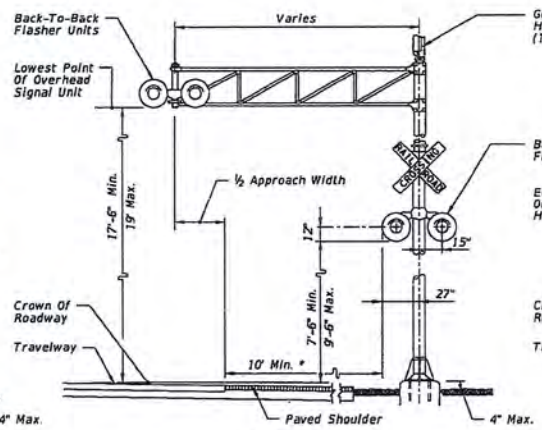

TYPE II

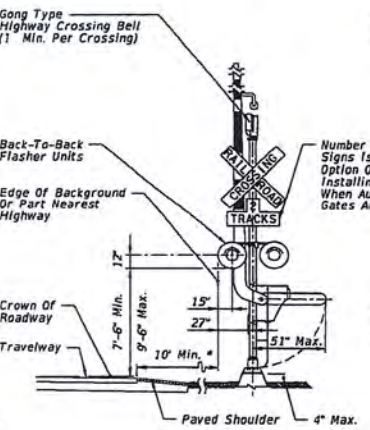

TYPE III

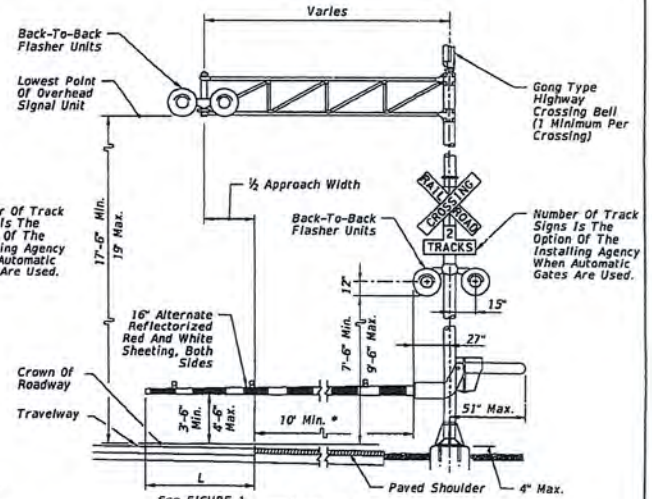

TYPE IV

LAST REVISION 07/01/13	REVISION	DESCRIPTION:	FDOT 2016 DESIGN STANDARDS	RAILROAD GRADE CROSSING TRAFFIC CONTROL DEVICES	INDEX NO. 17882	SHEET NO. 1 of 4

6/18/2015 10:34:05 AM

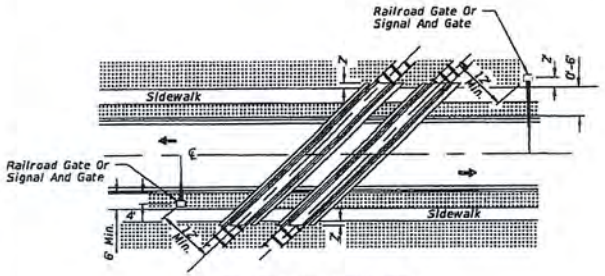

SIGNAL PLACEMENT AT RAILROAD CROSSING
(2 LANES, CURB & GUTTER)

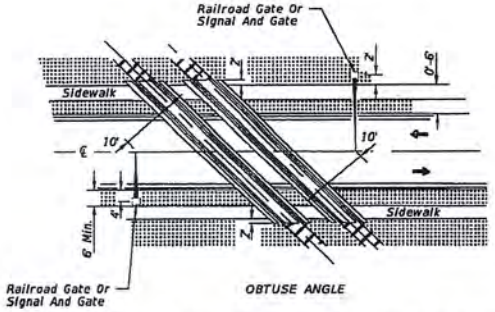

SIGNAL PLACEMENT AT RAILROAD CROSSING
(2 LANES, CURB & GUTTER)

GENERAL NOTES

1. The location of flashing signals and stop lines shall be established based on future (or present) installation of gate with appropriate track clearances.
2. Where plans call for railroad traffic control devices to be installed in curbed medians, the minimum median width shall be 12'-6".
3. Location of railroad traffic control device is based on the distance available between face of curb & sidewalk. 0' to 6' - Locate device outside sidewalk. Over 6' - Locate device between face of curb and sidewalk.
4. Stop line to be perpendicular to edge of roadway, approx. 15' from nearest rail; or 8' from and parallel to gate when present.
5. When a cantilevered-arm flashing-light signal is used, the minimum vertical clearance shall be 17'-6" from above the Crown of Roadway to the Lowest Point of the Overhead Signal Unit.

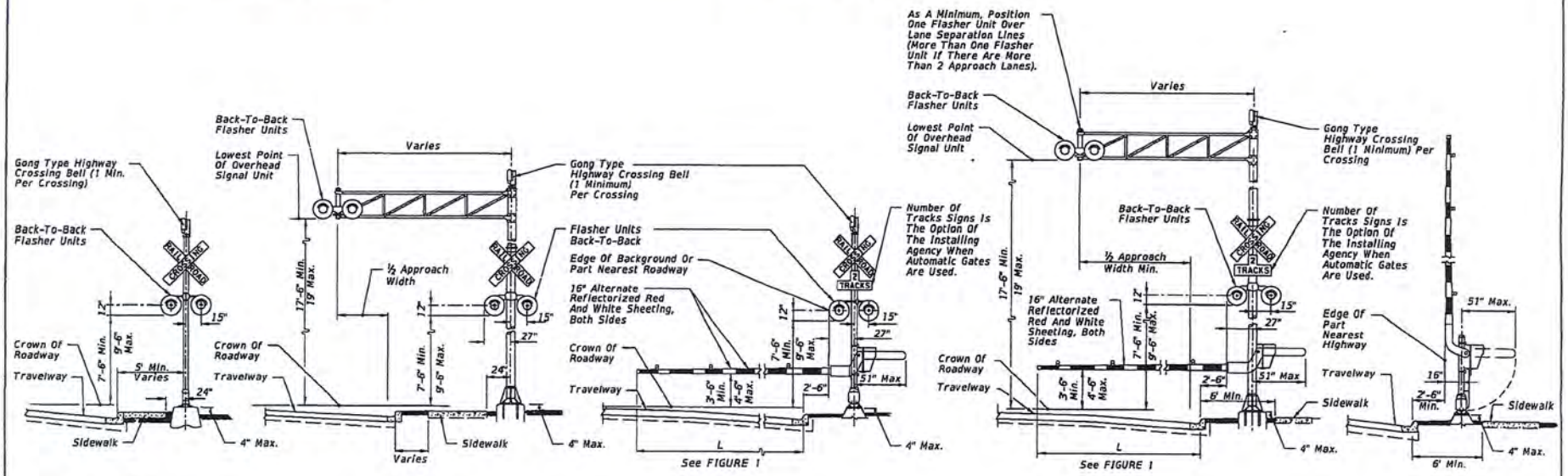

LAST REVISION	REVISION	DESCRIPTION:			INDEX NO.	SHEET NO.
07/01/14			FDOT 2016 DESIGN STANDARDS	RAILROAD GRADE CROSSING TRAFFIC CONTROL DEVICES	17882	2 of 4

6/10/2015 10:34:06 AM

RAILROAD CROSSING AT TWO (2)-LANE ROADWAY

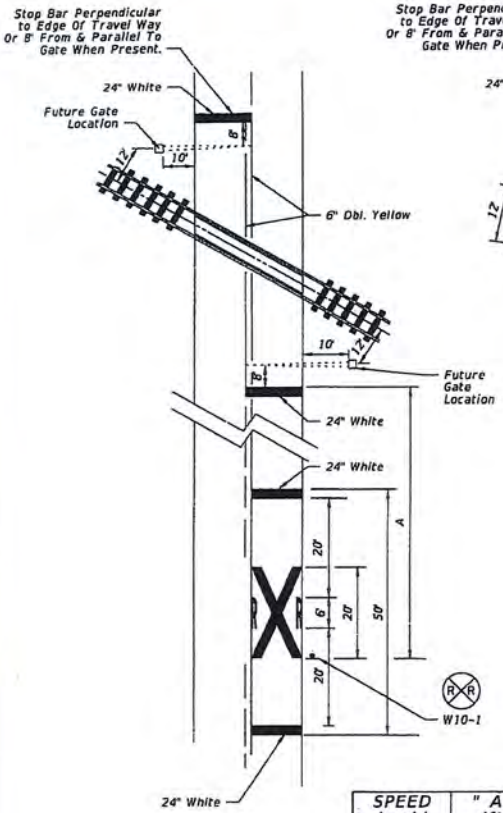

RAILROAD CROSSING AT MULTILANE ROADWAY

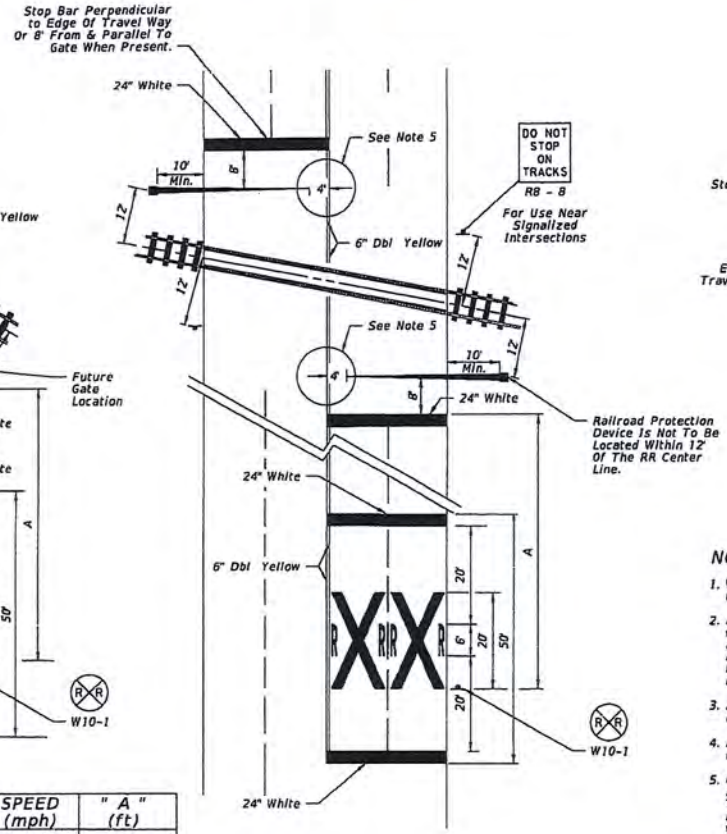

SPEED (mph)	" A " (ft)
60	400
55	325
50	250
45	175
40	125
35	100
URBAN	85 MIN.

RELATIVE LOCATION OF CROSSING TRAFFIC CONTROL DEVICES

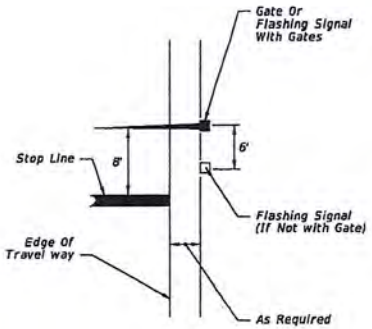

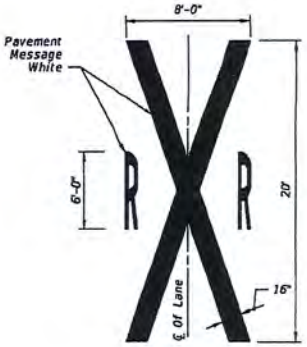

NOTES:

1. When computing pavement message, quantities do not include traverse lines.
2. Placement of sign W10-1 in a residential or business district, where low speeds are prevalent, the W10-1 sign may be placed a minimum distance of 100' from the crossing. Where street intersections occur between the RR pavement message and the tracks an additional W10-1 sign and additional pavement message should be used.
3. A portion of the pavement markings symbol should be directly opposite the W10-1 sign.
4. Recommended location for FTP-61-06 or FTP-62-06 signs, 100' urban and 300' rural. See Index 17355 for sign details.
5. Gate Length Requirements:
   For Two-way undivided sections:
   The gate should extend to within 1' of the center line. On multiple approaches the maximum gate length may not reach to within 1' of the center line. For those cases, the distance from the gate to the center line shall be a maximum of 4'.

   For one-way or divided sections:
   The gate shall be of sufficient length such that the distance from the gate tip to the inside edge of pavement is a maximum of 4'.

LAST REVISION	REVISION	DESCRIPTION:	FDOT 2016 DESIGN STANDARDS	RAILROAD GRADE CROSSING TRAFFIC CONTROL DEVICES	INDEX NO.	SHEET NO.
07/01/10					17882	3 of 4

6/10/2015 10:34:07 AM

STATE OF FLORIDA DEPARTMENT OF TRANSPORTATION

725-090-55
RAIL
10/98

CITY RESOLUTION
GRADE CROSSING TRAFFIC CONTROL DEVICES AND FUTURE RESPONSIBILITY

FINANCIAL PROJECT NO.	ROAD NAME OR NUMBER	COUNTY NAME	PARCEL & R/W NUMBER	FAP NUMBER
43367315701	S. SINCLAIR AVE.	LAKE	1(11000-SIGG)	OOS5-053-J

A RESOLUTION AUTHORIZING EXECUTION OF A RAILROAD REIMBURSEMENT AGREEMENT FOR THE INSTALLATION OF GRADE CROSSING TRAFFIC CONTROL DEVICES, AND FUTURE MAINTENANCE AND ADJUSTMENT OF SAID DEVICES; PROVIDING FOR THE EXPENDITURE OF FUNDS; AND PROVIDING WHEN THIS RESOLUTION SHALL TAKE EFFECT.

RESOLUTION NO. _____

ON MOTION OF Commissioner (Councilman) _____, seconded by Commissioner (Councilman) _____, the following RESOLUTION was adopted:

WHEREAS, the State of Florida Department of Transportation is constructing, reconstructing or otherwise changing a portion of the Public Road System, on S. SINCLAIR AVE., which shall call for the installation and maintenance of railroad grade crossing traffic control devices for railroad grade crossing over or near said highway; and

NOW, THEREFORE, BE IT RESOLVED BY THE CITY COMMISSION OF THE CITY OF TAVARES, FLORIDA;

That the City of TAVARES enter into a RAILROAD REIMBURSEMENT AGREEMENT with the State of Florida Department of Transportation and the FLORIDA CENTRAL RAILROAD COMPANY, INC. Company for the installation and maintenance of certain grade crossing traffic control devices designated as Financial Project Number 433673-1-57-01 on S. SINCLAIR AVE. which crosses the right of way and tracks of the Company at FDOT/AAR Crossing No. 625189-P located near TAVARES, Florida; and

That the City assume it's share of the costs for future maintenance and adjustment of said grade crossing traffic control devices as designated in the RAILROAD REIMBURSEMENT AGREEMENT; and

That the Mayor and City Clerk be authorized to enter into such agreements with the State of Florida Department of Transportation; and the FLORIDA CENTRAL RAILROAD COMPANY, INC. Company as herein described; and

That this RESOLUTION shall take effect immediately upon adoption.

INTRODUCED AND PASSED by the City Commission of the City of TAVARES, Florida, in regular session this _____ day of _____, 2016.

_____
Mayor - Commissioner

TTEST: _____ (SEAL)
City Auditor and Clerk

AGENDA SUMMARY
TAVARES CITY COUNCIL
DATE OF MEETING: August 3, 2016

AGENDA TAB NO. 10
SUBJECT TITLE: Tavares High School Booster Club Request for Contribution To purchase a Band Trailer

OBJECTIVE: To consider a contribution of $1,000 to the Tavares High School Booster Club (a 501c3 organization) to purchase a Band Trailer.

SUMMARY: As the city continues to build its relationship with and support of the Tavares Schools, one option that has presented its self is the Booster Clubs request to assist with funding the purchase of a band trailer (see attached letter). The cost of the trailer is $6,500, and the Tavares Waterfront Entertainment District has spearheaded a funding drive for the remainder of the cost of the Trailer from Tavares businesses.

Should the city contribute to the trailer, a large City of Tavares sponsorship logo will be placed on both sides of the trailer, thus promoting the city to other cities as the trailer visits other Florida communities.

Their remains $1,500 in the Tavares Community Grants fund.

OPTIONS:

1. Fund the request in the amount of $1,000
2. Do not fund the request.

STAFF RECOMMENDATION: That Council moves to contribute $1,000 from the Community Grant fund to the Tavares High Band Booster Club for the purchase of the Bands Trailer.

FISCAL IMPACT: Sufficient funds remain in the current budget "Community Grant Fund" to fund this request.

LEGAL SUFFICIENCY: This is legally sufficient.

Tavares High Band Booster, Inc.
P. O. Box 1363
Tavares, FL 32778

Andrew Dubbert, *Director of Bands*
dubberta@lake.k12.fl.us
Jeff Housouer, *President*

City of Tavares,

We have an exciting community opportunity regarding the Big Red Band at Tavares High School!

Our program has experienced amazing growth over the last three years as more and more middle and high students join the band! To accommodate our growing bands, we are in the process of purchasing new instruments, new uniforms, and we are currently in need of a larger band trailer.

The purchase of a new band trailer is a great opportunity our Big Red Band and Band Boosters to work together with the Tavares community towards a common goal. On our band trailer we plan to advertise for our sponsors as we travel all over the state for performances. To help us reach our goal and accommodate our growing bands, we are asking for financial support from the City of Tavares with $1000 sponsorship. For tax purposes, our Band Booster organization is a 501c3 organization and our tax exempt ID is 85-8016982072C-6. We also kindly ask that all checks be made out to *Tavares High Band Booster*.

The Big Red Band demonstrates professionalism and class at all times and we are proud ambassadors to the City of Tavares. By supporting us in this endeavor you will also be supporting the Tavares Middle School Lil' Red Band as we will be donating our current trailer to their program. We believe that this endeavor can continue to develop a cohesive and positive relationship between the Tavares community and Tavares High School.

Thank you for your consideration with this project and we look forward to working together for our Tavares community. Please feel free to contact me with any questions at dubberta@lake.k12.fl.us.

Andrew Dubbert

Tavares High School Band Director

Jeff Housouer

Tavares High Band Booster President

Brotherhood Integrity Generosity Respect Energy Discipline

"Strive for Perfection"

AGENDA SUMMARY
TAVARES CITY COUNCIL
August 3, 2016

AGENDA TAB NO. 11
SUBJECT TITLE: Discussion on Filling Horizon Team and Board Representation Vacancies

OBJECTIVE:

To present information to Council on current board representation to Horizon Project Teams, Boards and Committees by Councilmembers and other individuals and to discuss filling certain vacancies.

SUMMARY: The City Administrator develops a team of staff members to sheppard forward some of the many multi-year faceted projects the city is working on and invites one Councilmember to attend staff meetings from time to time on these projects. He refers to them as "Horizon Projects". Attached is a list of those projects and the team members. The list also includes other outside organizations that are represented by staff and councilmembers.

HORIZON PROJECTS (meet approximately 4 times a year)

There is a vacancy for the Sister City Horizon Team and Ruby Street Stormwater Project for a councilmember who would like to participate.

UNION MANAGEMENT TEAM

There is a vacancy for the Police Union Management Bargaining Team.

OTHER BOARDS

The following boards require a council representative and are vacant.

- Lake County League of Cities – meets monthly; 2nd Friday at 12:00 to 1:00 p.m. at the Elks Club in Tavares
- Lake-Sumter Metropolitan Planning Council – meets monthly, 4th Friday at 2:00 p.m. in Leesburg at the MPO Board Room
- School Concurrency Annual Meeting held in December (usually first week in December; date not scheduled as yet)
- Florida League of Cities Legislative Committees (new cycle starting in September--meets September, October, November at Legislative Conference and in August at Annual Conference: (staff may represent) 10:00 am to 3:00 p.m.

Vacancies:

- Growth Management & Economic Development Legislative Committee

- Urban Administration Legislative Committee

OPTIONS

Discuss filling vacancies to Police Union Management Bargaining Team and other Horizon Teams or Boards.

STAFF RECOMMENDATION

Discuss and indicate any changes to Horizon Teams or Boards.

STAFF RECOMMENDATION:

N/A

FISCAL IMPACT:

From time to time travel may be required and reimbursements are made to the representative who traveled.

LEGAL SUFFICIENCY:

This has met legal sufficiency.

HORIZON PROJECT TEAMS (Meets approximately 4 times per year)

Existing Active Teams

1. Special Events Project Team (Mayor Lori Pfister / Bob Tweedie)
2. Alfred Street-Carolina Street one way pair (Mayor Lori Pfister/ Jacques Skutt)
3. Public Safety Complex (Councilmember Bob Grenier/Richard Keith)
4. Woodlea Sports Park Complex (Vice Mayor Kirby Smith/Tamera Rogers)
5. Economic Development (Vice Mayor Kirby Smith/Bob Tweedie)
6. Sister City Program (_____/John Drury)
7. Library Expansion (Mayor Lori Pfister/Tamera Rogers)
8. Public Works Complex (Councilmember Bob Grenier/Chris Thompson)
9. Tavares Square (Vice Mayor Kirby Smith/Bob Tweedie)
10. Downtown Master Plan Update (Councilmember Lisa Johnson/Jacques Skutt)
11. Old 441 Corridor Improvements to Bay Road Team (Vice Mayor Kirby Smith/Jacques Skutt)
12. Historical Society Building (Councilmember Lisa Johnson/Chris Thompson)
13. Ruby Street Reconstruction/Stormwater project (_____/Brad Hayes)
14. State Road 19/CR 561 & CR 448 Corridors (Councilmember Bob Grenier/Jacques Skutt

UNION BARGAINING MANAGEMENT TEAM

Police Bargaining Management Team:

_____Councilmember

John Drury, City Administrator
Chief Stoney Lubins

Fire Bargaining Management Team

Councilmember Bob Grenier
John Drury, City Administrator
Richard Keith, Fire Chief

OTHER BOARD REPRESENTATION

Florida League of Cities Legislative Committees

– Urban Administration
_____- Growth Management & Economic Affairs

Brad Hayes – Environment & Energy Council
Chris Thompson – Transportation & Intergovernmental
Lori Houghton – Finance & Taxation

Lake Community Action Agency – 4th Wed. at 7 p.m.

Art Swanton– Representative

Lake County Library Advisory Board – 3rd Thursday at 5 p.m.

Patricia Miller – Representative
_____- Library Director - Alternate

Lake County League of Cities – 2nd Friday at 11:30 a.m.

_____ – Representative
Vice Mayor Kirby Smith - Alternate

Lake County League of Cities - Solid Waste Advisory Committee

Lori Houghton – Representative

Lake County School Board – Lake County Schools Local Preference Committee:

Lori Houghton - Member

Lake County Water Alliance Technical Committee

Brad Hayes – Representative

Metropolitan Planning Organization – 4th Wednesday at 2:00 p.m. MPO Board Room

_____– Governing Board Member
Vice Mayor Kirby Smith - Alternate

Metropolitan Planning Organization – Technical Advisory Committee – Second Wednesday at 1:30 p.m. – MPO Board Room (except for March, July & December)

Jacques Skutt – Representative
_____- Alternate

Metropolitan Planning Organization – Bicycle/Pedestrian Committee – Monthly on Thursdays except for March, July & December – 3:00 p.m. at Lake Sumter MPO office in Leesburg

_____ - Representative

Metropolitan Planning Organization – Citizens Advisory Committee – Second Wednesday of the month at 4:00 p.m. – MPO Board Room (except for months above)

David Clutts – Representative

Myregion.org

John Drury – Representative

Tavares Chamber of Commerce

_____ - Representative

School Concurrency Committee Annual Meeting (December 2016 – 10:00-12:00) – Date to be determined

_____– Representative
Jacques Skutt – School Concurrency Technical Advisory Committee

AGENDA SUMMARY
TAVARES CITY COUNCIL
DATE OF MEETING: August 3, 2016

AGENDA TAB NO. 12
SUBJECT TITLE: Work Authorization for Parsons Brinckeroff to Conduct a Utility Master Plan for Peninsula, Woodlea Rd, and Lane Park Area

OBJECTIVE: To Approve a Work Authorization for Parsons Brinkeroff to conduct Utility Master Plan Study of the Peninsula, Woodlea Rd, and Lane Park in the amount of $59,736.

SUMMARY:

The City and Lake County Government recently entered into an Interlocal Services Boundary Agreement (ISBA) that provides the city's future boundaries. Staff is beginning the process of planning for utility service to those future boundaries.

The City had issued a Request for Proposals for Consultant's in 2014 for various disciplines from which a library of professional firms was created to perform services for the City. The City's Procurement Manager takes requests from staff and identifies a qualified professional from that library, for staff who then negotiates a Scope of Work, Time line, and Fee to conduct the work. Parson Brinckeroff was selected by the procurement manager and city staff negotiated a scope of work and fee to conduct a Utility Study of Peninsula, Woodlea Rd and Lane Park Area. (see attached map).

A Master Plan Study includes necessary data and hydraulics criteria, calculates potential water and wastewater flow estimates and provides a conceptual water and wastewater system improvements/upgrades plan. This information is pertinent to the City's existing capacity for the wastewater treatment plant, water demand and Consumptive Use Permit (CUP) with St John's River Water Management District(SJRWMD). It also provides a road map to serve the ultimate city boundary with utility infrastructure.

OPTIONS:

1. Approve this Work Authorization for the Parson Brinckeroff in the amount of $61,950
2. Do Not Approve this Work Authorization for the Parson Brinckeroff in the amount of $61,950

STAFF RECOMMENDATION:

1. Approve this Work Authorization for the Parson Brinckeroff in the amount of $61,950

FISCAL IMPACT:

Funding Source: The funding is budgeted in this year's 15/16 budget under line item #441.3501.535.64-25 future projects ISBA Study with a balance of $589,531

LEGAL SUFFICIENCY:
Legally sufficient

WSP | PARSONS BRINCKERHOFF

301 East Pine Street
Capital Plaza Two, Suite 1020
Orlando, FL 32801
Main: 407-587-7800
www.wsp-pb.com/usa

July 18, 2016

Mr. Brad Hayes, Director
City of Tavares, Utilities Department
100 Captain Haynes Road
Tavares, Florida 32778

Re: Continuing Engineering Services Agreement per RFQ 2012-0015
Transmittal of Proposed Work Order No. 2
Water, WW and Reclaimed Water Utility Service Expansion Plan for the Peninsula Area

Dear Brad:

As you requested, attached please find a scope and budget proposal from Parsons Brinckerhoff, Inc. for a study to investigate the potential expansion of City of Tavares utility service to the Peninsula Area. This study will include data collection, estimation of future water demand, wastewater flow and reclaimed water demand projections, hydraulic analysis, identification of conceptual infrastructure improvements, and cost estimates for potentially extending service to the Peninsula Area. Specific tasks are described in the attached scope of services. Parsons Brinckerhoff, Inc. will provide these services based on the lump sum method of compensation under the terms of our Continuing Engineering Services Agreement signed November 2, 2015, following the receipt of a written project work order or purchase order authorization from the City.

If you have any questions, please feel free to contact me at 407-587-7825.

Sincerely,
Parsons Brinckerhoff, Inc.

A. Dale Helms, Jr.

A. Dale Helms, Jr., PE
Assistant Vice President / Water Area Manager

Attachment – Scope and Budget Proposal

Acknowledged and Accepted by the City of Tavares:

Name: John Drury
Title: City Administrator

Date

City of Tavares
Continuing Engineering Services Agreement per RFQ 2012-0015

PROJECT WORK ORDER NO. 2
Proposed Scope of Services and Budget Estimate

Water, Wastewater and Reclaimed Water Utility Service Expansion Plan for the Peninsula Area

Parsons Brinckerhoff, Inc.
July 18, 2016

A. Introduction

The City of Tavares, Florida (City, or Client) provides water, wastewater and reclaimed water service to residential and commercial customers within the City's utility service area. Currently, the City is in the process of changing land use types for single family residential developments planned for certain areas within the City. One of the areas that will be changed is the Peninsula Area, as shown in attached Figure 1. To support this area's development, new utility service will need to be provided.

The City and Parsons Brinckerhoff, Inc. (PB) entered into an Agreement for Continuing Engineering Services per RFQ 2012-0015 on November 2, 2015. Under this contract, the City has requested that PB investigate the utility infrastructure that will be required to potentially provide water, wastewater and reclaimed water service to the Peninsula Area.

With support from subconsultant Hydro Solutions Consulting, LLC (HSC), the PB Team provides the following proposed scope of services and associated lump sum budget estimate to complete a water, wastewater and reclaimed water system expansion plan to potentially provide utility service to the Peninsula Area shown in attached Figure 1. This study will include data collection, estimation of future 2028 water demand and 2030 wastewater flow and reclaimed water demand projections, hydraulic analysis, identification of conceptual infrastructure improvements, and cost estimates for the Peninsula Area. Specific task work efforts are described in the scope of services below. These services will be performed by the PB Team under the terms of the Continuing Engineering Services Agreement upon receipt of a written project work order or purchase order authorization to proceed from the Client.

B. Scope of Services

TASK 1. PROJECT MANAGEMENT, COORDINATION AND MEETINGS

101. Project Management and Coordination

The PB Team will provide overall management of the project including contract administration, budget management, invoicing, and monthly progress reports. PB will also coordinate with the Client's Project Manager, with Client staff, with subconsultants, and with other project stakeholders to manage and implement the performance of this project. The budget assumed for this task includes time required for coordination with the Client's separate hydraulic modeling consultant (ARCADIS).

102. Project Meetings

As part of the implementation of this project, the PB Team will prepare for (including preparation of agendas) and attend two (2) formal project meetings as described below.

- One (1) project coordination meeting with the Client's Project Manager and/or the City's Planning Department to obtain the currently approved land use classification of the Peninsula Area, to confirm project objectives, and to coordinate implementation of the project. As part of this meeting, the PB Team will perform a site visit to the Peninsula Area (Figure 1) and will confirm the location of the points of connection to existing infrastructure.
- One (1) project workshop with Client staff to present the results of the project, including recommended conceptual infrastructure improvements, conceptual costs, and the draft summary report. Client input and review comments will be discussed at this workshop and will be addressed and incorporated in the final version of project deliverables.

It is assumed that both project meetings described above will be held in Tavares. The PB Team also will prepare summary minutes of each meeting for the Client's records.

Furthermore, under this task the PB Team will prepare for and participate in up to six (6) teleconference meetings with the Client's separate planning consultant(s) (e.g., ARCADIS) regarding the existing City master planning data, the City's existing hydraulic network models for the water, wastewater and reclaimed water systems, or other existing information relevant to the completion of the Peninsula Area utility expansion planning study.

TASK 1 Deliverables: Meeting agendas and summary meeting minutes.

TASK 2. DATA REVIEW AND HYDRAULIC CRITERIA

201. Data Collection and Review

The PB Team will prepare and submit to the Client a detailed data request regarding information necessary for completion of the scope of services for the Peninsula Area. Such information may include but will not be limited to the following:

Water System Data

- Prior Client utility water master plan documents or reports.
- Existing water plant annual average production, permitted capacity and design capacity.
- Existing water use permits and water facility operational permits relevant to the study.
- Existing plans for expansion of water plant(s).
- Existing water distribution plans.
- Existing water customer billing data for past 12 months.
- Topographic data.
- City of Tavares utility water standards (including hydraulic design standards).
- Existing actual and design pressures at connection points for system expansion.
- Existing water system hydraulic network model.
- Any proposed future developments in the area.
- Available planning documents for the Peninsula Area.
- Population and water demand forecast estimates for 2028 and other available years.
- Available geographic information system (GIS) data files depicting existing water system infrastructure, service area boundaries, existing land use, and planned future land use.

Wastewater System Data

- Prior Client utility wastewater master plan documents or reports.
- Existing wastewater plant annual average influent and effluent flow, permitted capacity and design capacity.
- Existing wastewater facility operational permits relevant to the study.
- Existing plans for expansion of wastewater plant(s).
- Topographic data.
- City of Tavares utility wastewater standards (including hydraulic design standards).
- Existing pressures at connection points to force mains for system expansion.
- Existing wastewater system hydraulic network model.
- Existing lift station plans in area.
- Any proposed future developments in the area.
- Population and wastewater flow forecast estimates for 2030 and other available years.
- Available GIS data files depicting existing wastewater collection system infrastructure.

Reclaimed Water System Data

- City utility reclaimed water standards (including hydraulic design standards).

- Existing actual and design pressures at connection points for reclaimed water system expansions.
- Current and approved reclaimed water planning documents for the Peninsula Area.
- Population and reclaimed water demand forecast estimates for 2030 and other available years.
- Current City of Tavares reclaimed water ordinances.
- Current permit requirements for the reclaimed water services to be included in this study.

The PB Team will review and compile the information collected from the Client to become familiar with the system infrastructure, existing conditions, and expected future conditions.

202. Hydraulic Design Criteria and Assumptions

Confirmation of desired system performance criteria will be critical to the identification of suitable conceptual infrastructure improvements. The PB Team will gather pertinent design information and review the Client's hydraulic system standards to establish/confirm criteria such as pipe size and material requirements, system pressure requirements, valve and hydrant locations and minimum spacing, and hydraulic peaking factors in order to recommend adequate infrastructure to provide water, wastewater and reclaimed water services to the potential Peninsula expansion area. Design criteria will meet City's standards and other requirements. A summary of the hydraulic and system design criteria will be provided to the Client in digital format for confirmation and approval prior to proceeding with the remaining project tasks. The PB Team also will review and list permitting requirements to provide water, wastewater and reclaimed water services to the potential Peninsula expansion area.

TASK 2 Deliverables: Written data request. Summary list in digital format of hydraulic and system design criteria and permitting requirements, for Client confirmation.

TASK 3. DEMAND AND FLOW ESTIMATES FOR EXPANSION AREA

301. Water Demand Projections

The PB Team will prepare estimates of projected future water demand projections for the identified potential Peninsula expansion area shown in Figure 1. Projected future water demands will be estimated for future planning Year 2028. The water demand estimates will be calculated based on observed unit water demands and peaking factors utilized in adjacent areas under relatively similar conditions. The water demand projections will include estimates of average daily flow values, along with estimates of maximum day plus fire flow. The PB Team will summarize the estimated expansion area projected future 2028 water demands in a table, which will be submitted to the Client in digital format for review and confirmation.

302. Wastewater Flow Projections

The PB Team will review with the Client typical existing total and unit rates of wastewater flow, and wastewater flow-to-water demand ratios, observed within the Client's system for residential customers. Based on the results of this review, typical unit residential wastewater flow rates will be applied to the identified number of expected future residential wastewater customers to estimate projected future residential wastewater flow for the identified potential expansion area shown in Figure 1. From this analysis, the PB Team will compile projected future wastewater flow estimates for future planning Year 2030 for the potential Peninsula expansion area shown in Figure 1. The PB Team will summarize the projected future 2030 wastewater flows for the potential expansion area in a table, which will be submitted to the Client in digital format for review and confirmation.

303. Reclaimed Water Demand Projections

The PB Team will prepare estimates of projected future (planning Year 2030) reclaimed water demand projections for the identified potential Peninsula expansion area shown in Figure 1. These estimates will be developed based on current Client typical reclaimed water application rates and will consider future needs. Utilizing the Client's current GIS coverage data—such as the planned developments, population projections, and population distribution—the PB Team will develop an estimated spatial distribution for the reclaimed water demand projections. The PB Team will summarize the estimated expansion area projected future 2030 reclaimed water demands in a table, which will be submitted to the Client in digital format for review and confirmation.

TASK 3 Deliverables: Summary table in digital format of projected future (Year 2028 or 2030) water demand, wastewater flow and reclaimed water demand estimates for the identified Peninsula expansion service area, for Client confirmation.

TASK 4. HYDRAULIC EVALUATION

The PB Team will perform basic hydraulic evaluations for expansions of the Client's water, wastewater and reclaimed water infrastructure based on the Figure 1 Peninsula expansion area water demand, wastewater flow and reclaimed water demand estimates developed under Task 3 for the future 2028/2030 scenarios.

401. Water System Future Scenario Modeling

The PB Team will develop future 2028 hydraulic model scenarios to determine conceptual design-level sizing of water system piping required to expand the Client's water system service to the identified potential Peninsula expansion area shown in Figure 1. The PB Team will use Bentley *WaterGEMS* or similar software to develop this basic hydraulic network model. Modeling efforts performed under this task will be focused only on expansion infrastructure and do not include modeling of the Client's entire existing water system. The PB Team will rely upon Client input (from Task 201) for system characteristics at the point(s) of connection to the

existing system. Additionally, it is beyond the scope of this study to address storage or pumping facilities that would be a function of a complete system analysis.

The 2028 model scenarios for the water system will include two different approaches for analysis—one with the existing system level of service, and a second approach with the infrastructure expected to provide fire protection to the residential areas that are currently unprotected. Both approaches will add new water demands and conceptual pipelines where needed, identify new connection points to the Client's existing water system, provide two model scenarios (average daily demand and maximum day plus fire flow), and verify the model and adjust the recommended new conceptual infrastructure to accommodate the additional future demands. The PB Team will also coordinate model adjustments or conceptual infrastructure improvements with the separate consultant (ARCADIS) that maintains the Client's existing water system hydraulic model.

402. Wastewater System Future Scenario Modeling

The PB Team will develop future 2030 hydraulic model scenarios to determine conceptual-level sizing of wastewater system piping required to expand the Client's wastewater system service to the identified potential Peninsula expansion area shown in Figure 1, under future flow conditions. The PB Team will use Bentley *SewerGEMS* or similar software to develop this basic hydraulic network model. Modeling efforts performed under this task will be focused only on expansion infrastructure and do not include modeling of the Client's entire existing wastewater system. The PB Team will rely upon Client input (from Task 201) for system characteristics at the point(s) of connection to the existing system.

The future 2030 modeling analysis for the wastewater system infrastructure will include scenarios for both average daily flow and peak hour flow conditions, as estimated and confirmed under Task 3. Additionally, the hydraulic analysis will be performed based on the confirmed hydraulic standards and design criteria established under Task 202. For the potential future collection system expansion, the PB Team will review the gravity method for wastewater collection and the potential need for a lift station(s), if necessary, to convey the collected flows to the existing City system. Utilizing the information obtained from the City's Planning Department, the PB Team will create a conceptual layout for the required system expansion infrastructure (based on topography), identify connection points to the Client's existing wastewater collection system, and verify the model and adjust the recommended infrastructure to accommodate the additional future wastewater flows. The PB Team will also coordinate model adjustments or conceptual infrastructure improvements with the separate consultant (ARCADIS) that maintains the Client's existing wastewater system hydraulic model.

403. Reclaimed Water System Future Scenario Modeling

The PB Team will develop future 2030 hydraulic model scenarios to determine conceptual design-level sizing of reclaimed water system piping required to expand the Client's reclaimed water system service to the identified potential Peninsula expansion area shown in Figure 1. The PB Team will use Bentley *WaterGEMS* or similar software to develop this basic hydraulic

network model. Modeling efforts performed under this task will be focused only on expansion infrastructure and do not include modeling of the Client's entire existing reclaimed water system. The PB Team will rely upon Client input (from Task 201) for system characteristics at the point(s) of connection to the existing system. The hydraulic modeling analysis for the reclaimed water system will be performed based on the confirmed hydraulic standards and design criteria established under Task 202. Additionally, it is beyond the scope of this study to address storage or pumping facilities that would be a function of a complete reclaimed water system analysis.

Utilizing information provided by the City's Planning Department, the future hydraulic analysis will add new reclaimed water demands and conceptual pipelines where needed, identify new connection points to the Client's existing reclaimed water system, provide two model scenarios (average daily demand and peak hour demand), and adjust the recommended new conceptual infrastructure to accommodate the additional future reclaimed water demands. The PB Team will also coordinate model adjustments or conceptual infrastructure improvements with the separate consultant (ARCADIS) that maintains the Client's existing reclaimed water system hydraulic model.

TASK 4 Deliverables: Digital copies of water, wastewater and reclaimed water model files and scenarios.

TASK 5. CONCEPTUAL SYSTEM IMPROVEMENTS

501. Recommended System Infrastructure Improvements

Based on the hydraulic analyses performed under Task 4, the PB Team will develop a list of recommended infrastructure components that may be required to meet the future (2028/2030) water, wastewater and reclaimed water service needs of the identified Peninsula expansion service area. Each infrastructure component will include location, diameter/size/ capacity, and ancillary requirements such as electrical and instrumentation needs to provide complete operation.

Based on the limitations of this study, the recommended infrastructure improvements will only be determined at a conceptual level of design accuracy. Infrastructure sizing would need to be verified and finalized as part of a future preliminary and final engineering design effort. Furthermore, the conceptual infrastructure recommendations will be focused only on new facilities located between the existing system connection points and the identified expansion areas. Capital improvements that may be required for the Client's overall water, wastewater and reclaimed water systems (e.g., storage and pumping at treatment plant sites, transmission main upsizing, etc.) are outside of the scope of this study.

502. Conceptual Cost Analysis

Under this task, the PB Team will prepare a conceptual-level opinion of probable capital construction costs for each recommended infrastructure improvement component. Costs will

be referenced to the Engineering News-Record (ENR) construction cost index (CCI) as stated in 2016 dollars. Conceptual costs will be developed based on the estimated size and number of recommended new infrastructure components, multiplied by typical unit costs determined by the PB Team. Suitable unit costs will be selected based on relevant industry references, which may include data from recent bid tabulations, data on recent similar water and wastewater system projects, or other published cost estimating documents, as deemed appropriate.

The PB Team will summarize the lists of existing and future recommended conceptual water, wastewater and reclaimed water infrastructure components in tabular form, including the estimated conceptual costs. The table will include brief item descriptions and unit costs, along with any assumptions made in the development of unit costs. This information will be included in the final project report, described in Task 6 below.

TASK 6. SUMMARY REPORT

601. Draft Expansion Study Report

The PB Team will prepare a draft version of a water, wastewater and reclaimed water system expansion study report summarizing the analyses and results of the project. The draft report will be submitted to the Client for review and comment prior to the project results review workshop described under Task 102. The PB Team will provide a digital (PDF) version and up to six (6) hard copies of the draft report. During the project results workshop (under Task 102), the PB Team will summarize the draft report and receive/discuss the Client's review comments.

602. Final Expansion Study Report

The PB Team will address and incorporate review comments received from the Client in an updated final version of the Peninsula Area water, wastewater and reclaimed water system expansion study report. The PB Team will provide the Client with a digital (PDF) version and up to six (6) hard copies of the final project report.

TASK 6 Deliverables: Digital copy and up to six (6) hard copies of the draft summary report. Digital copy and up to six (6) hard copies of the final summary report.

C. Assumptions

The scope of services and estimated level of effort (budget estimate) outlined in this proposal are based on the following assumptions:

- All documents and data provided by the Client shall be provided in native digital format (e.g., MS Word or Excel) where available.
- The Client will provide the most recent, acceptable water and wastewater hydraulic models, in *WaterGEMS* and *SewerGEMS* software formats, respectively, including the latest available existing and future demand and flow data allocated to the appropriate

demand nodes. The hydraulic models shall be in working condition (i.e., able to run with current version software without requiring modifications).

- The Client will provide previous master plans and any other recent reports with water demand, wastewater flow and reclaimed water demand projections.
- The PB Team will base the conceptual infrastructure improvement recommendations on finalized (i.e., accepted by the Client) recent design of adjacent similar areas.
- The PB Team has assumed that the currently undeveloped lots within the potential expansion areas will be populated with similar patterns as the existing developed portions.
- The PB Team will review only those water and wastewater permits necessary to provide the recommended improvements to the identified expansion areas.

D. Services Not Included

The following services are not included in the scope of services for this project:

- Complex hydraulic analyses consisting of extended period simulations, dynamic simulations, or water quality simulations (including water age analysis).
- Development of detailed inventory/listing of equipment at Client's water and wastewater treatment facilities.
- Condition assessment of Client's pipelines or aboveground infrastructure.
- Services related to claims analysis or litigation support.
- Evaluation for potential inflow and infiltration issues associated with expansion areas.

E. Schedule

The scope of services outlined herein will be performed on a schedule mutually agreed between the Client and the PB Team. The schedule will be affected by the availability of information, results of meetings, and timeliness of feedback from the Client.

F. Budget Estimate

Compensation to PB for the scope of services provided will be based on a Lump Sum (firm fixed fee) method of payment. The amounts for labor and other reimbursable expenses summarized in Table 1 below and detailed in Attachment 1 are used to the develop the lump sum fee of **Sixty One Thousand Nine Hundred Fifty Dollars ($61,950)**.

Table 1. Estimated Lump Sum Task Budgets

Task	Description	Budget
1	Project Management, Coordination & Meetings	$ 20,169
2	Data Review and Hydraulic Criteria	$ 4,994
3	Demand and Flow Estimates for Expansion Area	$ 3,803
4	Hydraulic Evaluation	$ 17,575
5	Conceptual System Improvements	$5,806
6	Summary Report	$ 9,603
TOTAL LUMP SUM		**$ 61,950**

G. Subconsultant Participation

The PB Team for this project includes one subconsultant, HSC, who will perform the majority of the scope of services. A breakdown of the proposed budget for the subconsultant is included as Attachment 2.

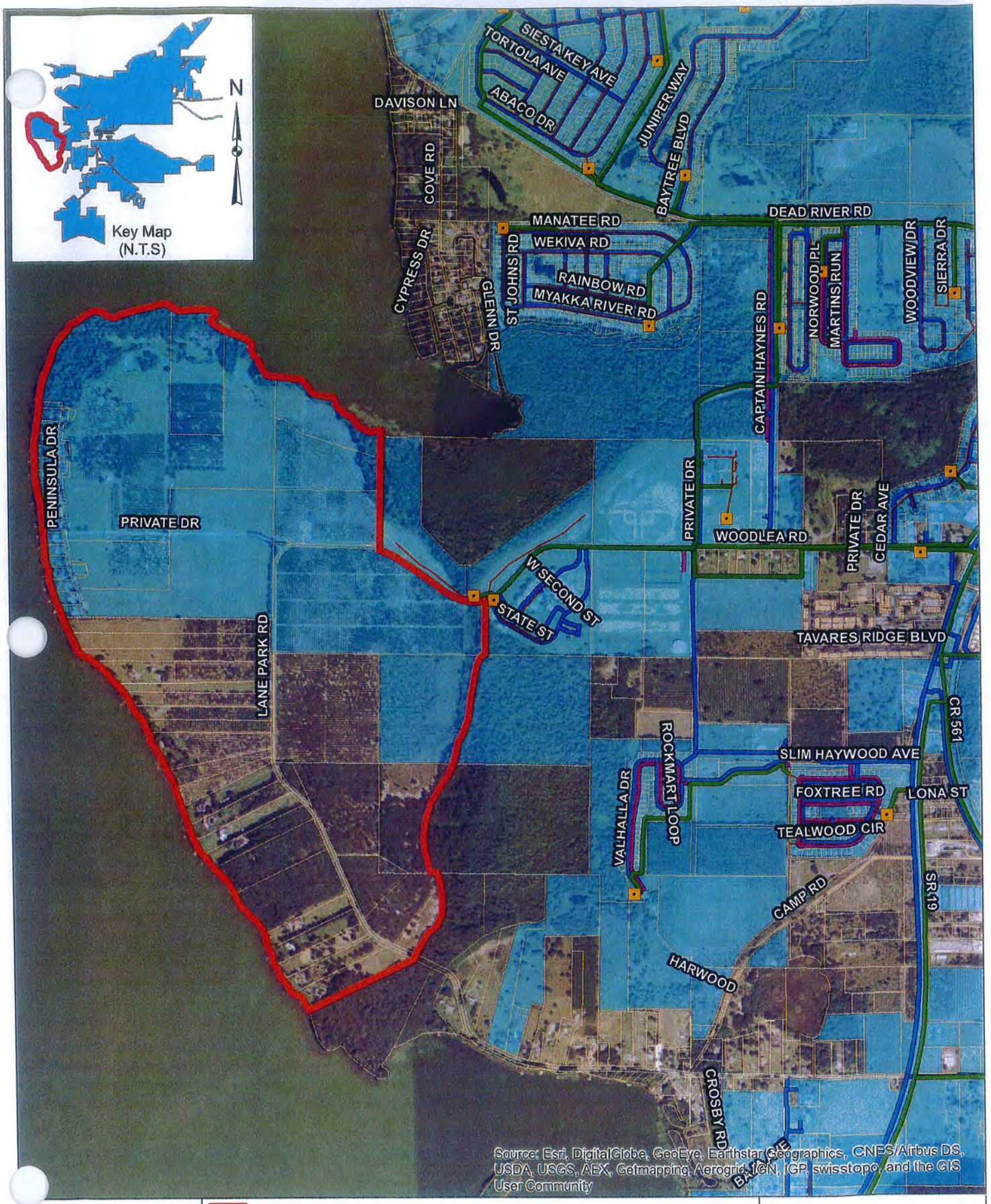

Figure 1 : Peninsula Study Area

Peninsula Study Area
Tax Parcels
Tavares City Limits
Lift Station
WW Force Main
WW Gravity
PW Main
RCW Main

N W E S

0 750 1,500 Feet

1 inch = 1,500 feet

HYDRO SOLUTIONS CONSULTING LLC

C:\Users\HSC\Scott_Projects\City_of_Tavares\GIS\Figure2_Peninsula_Aerial.mxd

ATTACHMENT 1

City of Tavares - Utility Service Expansion Plan for Peninsula Area

Parsons Brinckerhoff, Inc. Proposal - Lump Sum Project Budget

TABLE 1-1. PB LABOR BUDGET

Task #	Task Description	Task Labor Hours	Task Labor Cost	Personnel Classification, Contract Labor Rate ($/hr), Person-Hours and Cost							
				P-14 Senior Engineering Manager	P-13 Senior Supervising Engineer	P-12 Supervising Engineer	P-11 Lead Engineer	P-10 Project Engineer	P-10 Sr. Environ. Scientist	P-08 Engineer I	P-09 Project Accountant II
				$ 218.10	$ 179.11	$ 149.01	$ 124.65	$ 102.36	$ 103.39	$ 83.23	$ 88.68
1	Project Management, Coordination & Meetings	18	$ 3,043		16						2
2	Data Review and Hydraulic Criteria	-	$ -								
3	Demand and Flow Estimates for Expansion Area	-	$ -								
4	Hydraulic Evaluation	6	$ 1,075		6						
5	Conceptual System Improvements	4	$ 716		4						
6	Summary Report	6	$ 1,075		6						
	TOTAL LABOR HOURS	34		-	32	-	-	-	-	-	2
	TOTAL LABOR COST		$ 5,909	$ -	$ 5,732	$ -	$ -	$ -	$ -	$ -	$ 177

TABLE 1-2. PB DIRECT COST BUDGET

Task #	Task Description	Task Direct Cost	Direct Cost Categories, Unit Rates, Number Required or Estimated Budget Per Task							
			8.5x11 B&W Copy (each) $0.10	8.5x11 Color Copy (each) $0.25	11x17 B&W Copy (each) $0.20	11x17 Color Copy (each) $0.50	Courier Packages (at cost)	USPS Mailings (at cost)	Travel* (at cost)	Field Equipment (at cost)
1	Project Management, Coordination & Meetings	$ 135							$ 135	
2	Data Review and Hydraulic Criteria	$ -								
3	Demand and Flow Estimates for Expansion Area	$ -								
4	Hydraulic Evaluation	$ -								
5	Conceptual System Improvements	$ -								
6	Summary Report	$ 180		600		60				
	TOTAL NUMBER OF UNITS		-	600	-	60				
	TOTAL DIRECT COST	$ 315	$ -	$ 150	$ -	$ 30	$ -	$ -	$ 135	$ -

* Travel associated with two meetings in Tavares.

TABLE 1-3. SUBCONSULTANT COST BUDGET (*refer to Attachment 2*)

Task #	Task Description	Task Sub Cost	HSC
1	Project Management, Coordination & Meetings	$ 16,991	$ 16,991
2	Data Review and Hydraulic Criteria	$ 4,994	$ 4,994
3	Demand and Flow Estimates for Expansion Area	$ 3,803	$ 3,803
4	Hydraulic Evaluation	$ 16,500	$ 16,500
5	Conceptual System Improvements	$ 5,090	$ 5,090
6	Summary Report	$ 8,348	$ 8,348
	TOTALS	$ 55,726	$ 55,726

TABLE 1-4. TOTAL BUDGET SUMMARY

Task #	Task Description	Task Total Budget	PB Labor Cost	PB Direct Cost	Task Sub Cost
1	Project Management, Coordination & Meetings	$ 20,169	$ 3,043	$ 135	$ 16,991
2	Data Review and Hydraulic Criteria	$ 4,994	$ -	$ -	$ 4,994
3	Demand and Flow Estimates for Expansion Area	$ 3,803	$ -	$ -	$ 3,803
4	Hydraulic Evaluation	$ 17,575	$ 1,075	$ -	$ 16,500
5	Conceptual System Improvements	$ 5,806	$ 716	$ -	$ 5,090
6	Summary Report	$ 9,603	$ 1,075	$ 180	$ 8,348
	TOTALS	$ 61,950	$ 5,909	$ 315	$ 55,726

ATTACHMENT 2

HYDRO SOLUTIONS CONSULTING LLC

HSC FEE ESTIMATE
PARSONS BRINCKERHOFF
CITY OF TAVARES, FLORIDA
Project Work Order 2 - Utility Service Expansion Plan for Peninsula Area

Phase/Task	Task Description	Principal	Sr Prj Man	Fin Admin	Sr Tech Prof II	Des/CADD Opr	Admin III	Total Hours By Task	Subconsultants	Total HSC & Subs By Task	Direct Costs	Grand Total
	Multiplier 2.75	$ 85.00	$ 55.00	$ 42.00	$ 39.00	$ 33.00	$ 23.00					
		$ 233.75	$ 151.25	$ 115.50	$ 107.25	$ 90.75	$ 63.25					
Phase 1	***Project Management and Meetings***	*3*	*64*	*20*	*34*	*0*	*4*	*125*	*$ - $ -*	*$ 16,590.75*	*$ 400.00*	*$ 16,990.75*
Task 101	Management and Coordination	0	24	14	0	0	0	38		$ 5,247.00		
Task 102	Meetings	3	40	6	34	0	4	87		$ 11,343.75		
Phase 2	***Data Review and Hydraulic Criteria***	*0*	*16*	*0*	*24*	*0*	*0*	*40*	*$ - $ -*	*$ 4,994.00*		*$ 4,994.00*
Task 201	Data Collection and Review	0	8	0	12	0	0	20		$ 2,497.00		
Task 202	Design Criteria and Assumptions	0	8	0	12	0	0	20		$ 2,497.00		
Phase 3	***Capacity Requirements for Expansion Area***	*0*	*6*	*0*	*27*	*0*	*0*	*33*	*$ - $ -*	*$ 3,803.25*		*$ 3,803.25*
Task 301	Water Service Demand Projections	0	2	0	9	0	0	11		$ 1,267.75		
Task 302	Wastewater Flow Projections	0	2	0	9	0	0	11		$ 1,267.75		
Task 303	Reclaimed Water Service Demand Projections	0	2	0	9	0	0	11		$ 1,267.75		
Phase 4	***Hydraulic Evaluation***	*0*	*24*	*0*	*120*	*0*	*0*	*144*	*$ - $ -*	*$ 16,500.00*		*$ 16,500.00*
Task 401	Water System Future Modeling Senarios (Year 2028)	0	8	0	40	0	0	48		$ 5,500.00		
Task 402	Wastewater System Future Modeling Senarios (Year 2030)	0	8	0	40	0	0	48		$ 5,500.00		
403	Reclaimed Water System Future Modeling Senarios (Year 2030)	0	8	0	40	0	0	48		$ 5,500.00		
5	***Conceptual Water, Wastewater and RW System Improvements***	*3*	*12*	*0*	*24*	*0*	*0*	*39*	*$ - $ -*	*$ 5,090.25*		*$ 5,090.25*
501	Water, Wastewater, and Reclaimed Water System Requirements	3	9	0	12	0	0	24		$ 3,349.50		
Task 502	Improvements Conceptual Cost Analysis	0	3	0	12	0	0	15		$ 1,740.75		
Phase 6	***Summary Report***	*2*	*24*	*0*	*30*	*0*	*10*	*66*	*$ - $ -*	*$ 7,947.50*	*$ 400.00*	*$ 8,347.50*
Task 601	Draft Expansion Plan Report	1	14	0	20	0	6	41		$ 4,875.75		
Task 602	Final Expansion Plan Report	1	10	0	10	0	4	25		$ 3,071.75		
	Totals	**8**	**146**	**20**	**259**	**0**	**14**	**447**	**$ - $ -**	**$ 54,925.75**	**$ 800.00**	**$ 55,725.75**
	Contingency											**$ -**
	Grand Total											**$ 55,725.75**

AGENDA SUMMARY
TAVARES CITY COUNCIL
DATE OF MEETING: August 3, 2016

AGENDA TAB NO. 13
SUBJECT TITLE: Budget Workshop for FY2017 Proposed Budget

OBJECTIVE:

To provide Council and opportunity for discussion of the Fiscal Year 2017 Proposed Budget (October 1, 2016 through September 30, 2017), all funds.

SUMMARY:

Previously, all FY2017 Proposed Budgets for the General Fund, Special Revenue Funds, Special Funds, and the Capital Improvement Plan (CIP) were presented to the City Council on June 15, July 6th, and July 20th. Council

The City Council has asked good questions at previous workshops, and staff has researched and presented responses to Council. Attached are the most recent questions from the City Council and answers provided by staff (Exhibit A).

An opportunity exists to discuss and deliberate the FY2017 Proposed Budgets.

RECOMMENDATION:

Staff recommends that Council review the most recent questions and answers (Exhibit A), and discuss the FY2017 Proposed Budgets.

FY 2017 Budget Questions
July 20, 2016 Budget Workshop

Exhibit A

Kirby Smith

1. Asked to move $97,737 from the West Main Street Streetscape to street paving. Bob Grenier and Lori Pfister both agreed.
   The $97,737 for the West Main Street Streetscape has been moved from 001-1501-515.64-25 to 001-4102-541.63-30 for street paving. Bringing the total for street paving to $272,737.

2. Requested that the remainder of $23,500 for the Caroline Street maintenance contract be moved to street paving.
   This will be done in FY 2017 after a contract is secured.

3. Request to move $4,500 of $12,000 that has been budgeted for the Boo Festival to street paving.
   This item has been flagged to be revisited. See attached Community Services Director revised budget for the event.

4. Reduce Arts & Culture budget to $7,000 and give the rest to street paving.
   $4,850 has been removed from the Arts & Culture (001-7202-572.52-30) to 001-4102-541.63-30 for street paving. Bringing the total for street paving to $277,587

5. Unspent money in Freedom Flag fund has been changed from "Appropriated Reserves" to "Fund Balance."

Tavares "Boo Festival" *October 28, 2016*

REVENUES	ACTUAL F/Y 2016 BUDGET	PROPOSED F/Y 2017 BUDGET
BOO Festival Budget from F/Y 2016	$5,000.00	$11,000.00
BOO Festival Budget From Recreation Budget	1,000.00	
TOTAL REVENUES	**6,000.00**	
EXPENSES		
Vintage car show	375.00	-0-
Movie in the park	751.00	780.00
Dance Depot	150.00	150.00
Vendors - balloon artist, face painter, etc.	1,000.00	1,000.00
Photo Booth	249.00	250.00
*Candy/Prizes	816.17	2,500.00
Musical Entertainment/Bands	-0-	2,000.00
Miscellaneous • Hay bales for hayrides and seating • Trophies/awards for various contests • Event staff t-shirts • Carnival supplies (toys)	720.00	1,500.00
Carnival games	160.00	650.00
Rental items (tents, tables, chairs)	767.93	1,200.00
Fun4LakeKids website advert	250.00	250.00
Triangle News Leader advert	240.00	240.00
Park Clean-up	340.00	340.00
Paint for props	88.12	140.00
TOTAL EXPENSES	**$5,907.22**	**$11,000.00**

*Staff has evaluated the "Boo" Festival budget as requested by Councilmember Smith and has reduced the musical/entertainment budget to $2000.00, for a percentage decrease of 44.44% from the initial request, and the overall budget has been decreased by $1000.00 for a percentage decrease of 8.33%.

Attached is an example of a theatrical group that may be hired along with local musical acts to provide entertainment throughout the night.

JOHN DIDONNA

Victorian horror troupe Phantasmagoria brings its "Wickeder Little Tales" show to the Bay Street Players at the Historic State Theater.

Orlando Victorian troupe brings horror stories, legends, folk and fairy tales to Eustis

By Christine Cole
Correspondent

EUSTIS — Director, producer, actor and teacher John DiDonna loves scary stories

When he was a kid, his friends would talk about their heroes, usually sports stars. But DiDonna's world revolved around horror stories and movies, which often starred the English actor Peter Cushing.

"I always loved horror," said DiDonna, who said for decades he thought about combining that fascination with his day job, the theater. "I had an idea about a horror circus. But seven years ago it all clicked."

After creating a show a year for the Victorian horror troupe Phantasmagoria Orlando, DiDonna took the best parts of each and founded a touring company, "Wicked Little Tales," and, now, "Wickeder Little Tales," which will be performed for one night only at 8 p.m. Saturday at the State Theatre, home of the Bay Street Players.

The shows include horror stories, legends, folk and fairy tales, myths and literary leaps into the dark corners of the mind, written by Edgar Allen Poe, Charles Dickens and Washington Irving.

He highlights the troupe's talents, mixing in aerial feats, fire dancers and combat pieces and adding live music and large-scale puppetry, such as a 10-feet-tall Grendel for "Beowolf." While researching, he located a story by the Brothers Grimm that parents had insisted be taken out of an early compilation and he tracked down a forgotten Native American tale.

"I do a year of research for each show," he said.

The scariest story?

" 'The Legend of Sleepy Hollow' when Ichabod is out in the woods. In Poe's 'The Tell Tale Heart,' one person was so afraid he left the theater. One woman told me our story of 'Frankenstein' had her absolutely in tears. We hope everyone will be touched by the stories."

"Phantasmagoria" has appeared, among other places, in the Orlando International Fringe Festival and outdoors at Renninger's Antique Center in Mount Dora during its annual Steampunk Industrial Show. "Wicked Little Tales" and "Wickeder Little Tales" have toured to Atlanta, Baltimore, Md., and Ocala.

Seth Kubersky, who is a co-producer with DiDonna at Empty Spaces Theatre Co., also directed. Additional directing was done by Kevin G Becker and Chris Prueitt. Tickets are $16 or $18 at the door. For reservations, call 352-357-7777.

AGENDA SUMMARY
TAVARES CITY COUNCIL
AUGUST 3, 2016

AGENDA TAB NO. 14
SUBJECT TITLE: City Administrator Report

OBJECTIVE: To inform Council on city related matters.
SUMMARY: Will be presented at meeting

City Council Regular Meeting & Budget Workshop	***August 17, 2016 – 4:00 p.m. City Council Chambers***
Library Board	***August 17, 2016 – 2:30 p.m. – Library Conference Room***
Planning & Zoning Board	***August 18, 2016 – 3:00 p.m. – City Council Chambers***
Code Enforcement Hearing	***August 22, 2016 – 5:00 p.m. – City Council Chambers***

CITY SPONSORED OR AFFILIATED EVENTS

Tavares Chamber Business of the Year Gala	***September 8, 2016***
Rifles, Rails & History	***September 23-25, 2016 – Wooton Park***
Rocktober Fest	***October 8, 2016 – Wooton Park***
Un-Boo-Lievable Family Fall Festival	***October 28, 2016 – 6 pm to 9 pm Wooton Park***
Monster Splash	***October 29, 2016***
Hydro-Turf Jet Ski	***November 5-6, 2016 World Championship***
General Election	***November 8, 2016 (City Hall is a Precinct)***
Tavares Chamber Taste of Tavares	***November 10, 2016***
CRA Fall Thunder Regatta	***November 18-20 – Wooton Park***
Christmas Parade & Celebration	***December 3, 2016 Parade at 5:00 p.m. on Main Street***

OTHER COMMUNITY EVENTS

Fight for the Cure	***August 27, 2016 – Wooton Park***
Chamber Business Luncheon	***August 24, 2016 – Civic Center 11:30 – 1:30***
MDA Walk	***September 17, 2016 – Wooton Park***

OTHER OUTSIDE AGENCY MEETINGS

Lake County League of Cities	***Friday, August 12, 2016 – 12:00 noon*** ***Elks Lodge***
Lake Sumter MPO	***August 24, 2016 – 2:00 p.m. – Leesburg MPO office***

AGENDA SUMMARY
TAVARES CITY COUNCIL
August 3, 2016

AGENDA TAB NO. 15
SUBJECT TITLE: City Councilmembers Report

OBJECTIVE:

To inform Council on city related matters.

SUMMARY:

Council will be offered an opportunity to provide a report at the meeting.

OPTIONS:

N/A

STAFF RECOMMENDATION:

N/A

FISCAL IMPACT:

N/A